SUNFLEX
METALLOY PVT. LTD.
AN ISO 9001:2015 CERTIFIED CO.

PIPE / TUBING CHART

ANSI / COMMERCIAL

Seamless & Welded Construction

AVAILABLE ALLOYS:
CARBON STEEL,
STAINLESS STEEL
ALUMINUM
MONEL
CHROMOLY

Nominal Pipe Size (NPS/IPS)	OD	Wall Thickness per ANSI B 36.19 (average)							
		SCH 5s	SCH 10s	SCH 40s	STD	SCH 80s	XH	SCH 160	XXH
1/8"	0.405		0.049	0.068	0.068	0.095	0.095		
1/4"	0.540		0.065	0.088	0.088	0.119	0.119		
3/8"	0.675		0.065	0.091	0.091	0.126	0.126		
1/2"	0.840	0.065	0.083	0.109	0.109	0.147	0.147	0.187	0.294
3/4"	1.050	0.065	0.083	0.113	0.113	0.154	0.154	0.218	0.308
1"	1.315	0.065	0.109	0.133	0.133	0.179	0.179	0.250	0.358
1 1/4"	1.660	0.065	0.109	0.140	0.140	0.191	0.191	0.250	0.382
1 1/2"	1.900	0.065	0.109	0.145	0.145	0.200	0.200	0.281	0.400
2"	2.375	0.065	0.109	0.154	0.154	0.218	0.218	0.343	0.436
2 1/2"	2.875	0.083	0.120	0.203	0.203	0.276	0.276	0.375	0.552
3"	3.500	0.083	0.120	0.216	0.216	0.300	0.300	0.437	0.600
3 1/2"	4	0.083	0.120	0.226	0.226	0.318	0.318		0.636
4"	4.500	0.083	0.120	0.237	0.237	0.337	0.337	0.531	0.674
4 1/2"	5				0.247		0.355		0.710
5"	5.562	0.109	0.134	0.258	0.258	0.375	0.375	0.625	0.750
6"	6.625	0.109	0.134	0.280	0.280	0.432	0.432	0.718	0.864
7"	7.625				0.301		0.500		0.875
8"	8.625	0.109	0.148	0.322	0.322	0.500	0.500	0.906	0.875
9"	9.625				0.342		0.500		
10"	10.750	0.134	0.165	0.365	0.365	0.593	0.500	1.125	
12"	12.750	0.156	0.180	0.375	0.375	0.687	0.500	1.312	
14"	14	0.156	0.188	0.375	0.375	0.750	0.500	1.406	
16"	16	0.165	0.188	0.375	0.375	0.843	0.500	1.593	
18"	18	0.165	0.188	0.375	0.375	0.937	0.500	1.781	
20"	20	0.188	0.218	0.375	0.375	1.031	0.500	1.968	
22"	22	0.188	0.218	0.375	0.375		0.500		
24"	24	0.218	0.250	0.375	0.375	1.218	0.500	2.343	
26"	26		0.312	0.375	0.375		0.500		
28"	28		0.312	0.375	0.375		0.500		
30"	30	0.250	0.312	0.375	0.375		0.500		
32"	32		0.312	0.375	0.375		0.500		
34"	34		0.344	0.375	0.375		0.500		
36"	36		0.312	0.375	0.375		0.500		
38"	38			0.375	0.375		0.500		
40"	40			0.375	0.375		0.500		
42"	42			0.375	0.375		0.500		
44"	44			0.375	0.375		0.500		

SUNFLEX
METALLOY PVT. LTD.
AN ISO 9001:2015 CERTIFIED CO.

SUNFLEX
METALLOY PVT. LTD.
AN ISO 9001:2015 CERTIFIED CO.

PIPE / TUBING CHART

NAVY / MIL-T-16420K

OD TUBING	OD	Wall Thickness per MIL-T-16420K (minimum)					
		Class 50	Class 200	Class 700	Class 1650	Class 3300	Class 6000
1/8" OD	0.125					0.028	0.028
1/4" OD	0.250		0.035			0.035	0.058
3/8" OD	0.375					0.049	0.083
1/2" OD	0.500		0.035	0.065	0.035	0.072	0.120
3/4" OD	0.750				0.058	0.109	0.165
1" OD	1				0.072	0.134	0.220
1 1/4" OD	1.250				0.095	0.165	0.284
1 1/2" OD	1.500				0.109	0.203	0.340
2" OD	2				0.148	0.284	0.454
2 1/2" OD	2.500				0.180	0.340	0.547

COMPOSITION:

70/30 Copper Nickel (copper alloy 715)
90/10 Copper Nickel (copper alloy 706)

TYPE:

1 - Seamless
2 - Welded

CLASS:

50 (50 lb/in^2 maximum working pressure - Type 2 ONLY)
200 (200 lb/in^2 maximum working pressure)
700 (700 lb/in^2 maximum working pressure)
1650 (650 lb/in^2 maximum working pressure)
3300 (3300 lb/in^2 maximum working pressure - Type 1 ONLY)
6000 (6000 lb/in^2 maximum working pressure - Type 1 ONLY)

GRADE:

1. Material supplied without heat identifcation.
2. Material supplied with heat identifcation.

Nominal Pipe Size (NPS/IPS)	OD	Wall Thickness per MIL-T-16420K (minimum)					
		Class 50	Class 200	Class 700	Class 1650	Class 3300	Class 6000
1/8"	0.405					0.058	0.095
1/4"	0.540		0.065	0.065	0.042	0.072	0.120
3/8"	0.675		0.065	0.072	0.049	0.095	0.148
1/2"	0.840		0.065	0.072	0.058	0.120	0.203
3/4"	1.050		0.065	0.083	0.083	0.148	0.238
1"	1.315		0.065	0.095	0.095	0.180	0.300
1 1/4"	1.660		0.072	0.095	0.120	0.220	0.380
1 1/2"	1.900		0.072	0.109	0.134	0.250	0.425
2"	2.375		0.083	0.120	0.165	0.340	0.520
2 1/2"	2.875		0.083	0.134	0.203	0.380	0.630
3"	3.500		0.095	0.165	0.250	0.458	0.760
3 1/2"	4		0.095	0.180	0.284		
4"	4.500		0.109	0.203	0.340		
4 1/2"	5		0.120	0.203	0.380		
5"	5.563		0.125	0.220	0.425		
6"	6.625		0.134	0.259	0.457		
7"	7.625		0.134	0.284	0.526		
8"	8.625		0.148	0.340	0.595		
9"	9.625		0.187	0.340	0.664		
10"	10.750	0.134	0.187	0.380	0.741		
12"	12.750	0.156	0.250	0.454	0.879		
14"	14	0.165		0.473			
16"	16	0.165		0.534			
18"	18	0.180					
20"	20	0.180					
22"	22	0.180					
24"	24	0.250					
26"	26						
28"	28						
30"	30	0.250					
32"	32						
34"	34						
36"	36						
38"	38						
40"	40	0.312					
42"	42						
44"	44						

SUNFLEX
METALLOY PVT. LTD.
AN ISO 9001:2015 CERTIFIED CO.

FLANGE CHART

250# NAVY

Specifcation: NAVSEA DWG 810-4715319
Fig 5C

NAVSEA DWG 803-6983512
Fig 24-D (SW) / 22-D (SO) / 21-D (BL) / 19-D (WN)

Flange Drilling: MIL-F-20042

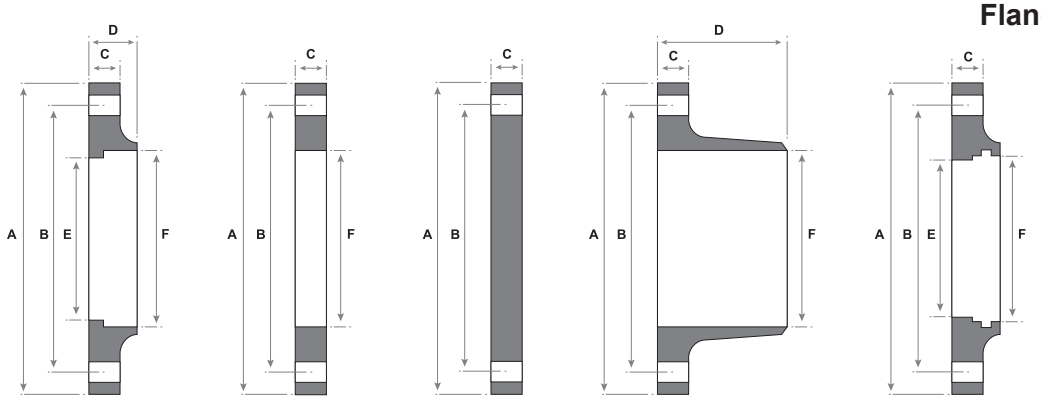

Socket Weld | Slip-On | Blind | Weld Neck | Sil Braze

SERVICE RATING TABLE		
FIGURE	Blind, Slip On, Socket Weld	Welding Neck
SIZE	1/4 to 12	2 to 24
WOG	250 PSI at 150° F	250 PSI at 150° F
STEAM	150 PSI at 425° F	150 PSI at 425° F

250# MIL-F-20042 FLANGES											
SIZE	SMI P/N	A	C	B (Bolt Circle)	D (SW)	D (WN)	E (SW / SB)	F MIN / MAX (SW / SB / SO)	F (WN)	№ of Holes	Drill Size
1/4"	FLN**XY**250-040	3 1/4	11/16	2 1/8	7/8		0.396	0.545 / 0.575		3	9/16
3/8"	FLN**XY**250-060	3 3/8	11/16	2 1/8	7/8		0.531	0.690 / 0.710		3	9/16
1/2"	FLN**XY**250-100	3 9/16	11/16	2 7/16	13/16		0.710	0.845 / 0.875		3	9/16
3/4"	FLN**XY**250-150	3 13/16	11/16	2 11/16	13/16		0.920	1.055 / 1.085		4	9/16
1"	FLN**XY**250-200	4 1/4	3/4	3 1/8	15/16		1.185	1.320 / 1.350		4	9/16
1 1/4"	FLN**XY**250-250	4 1/2	13/16	3 3/8	1 1/16		1.516	1.665 / 1.695		4	9/16
1 1/2"	FLN**XY**250-300	5 1/16	13/16	3 15/16	1 3/16		1.756	1.905 / 1.935		6	9/16
2"	FLN**XY**250-400	5 9/16	13/16	4 7/16	1 5/16	2 5/8	2.240	2.380 / 2.426	2.115	6	11/16
2 1/2"	FLN**XY**250-450	6 1/8	15/16	5	1 7/16	2 13/16	2.710	2.880 / 2.931	2.615	6	11/16
3"	FLN**XY**250-500	6 5/8	15/16	5 1/2	1 7/16	2 3/4	3.310	3.505 / 3.560	3.220	8	11/16
3 1/2"	FLN**XY**250-550	7 3/16	1	6 1/16	1 1/2	2 7/8	3.810	4.005 / 4.060	3.720	8	11/16
4"	FLN**XY**250-600	7 11/16	1	6 9/16	1 5/8	3 1/16	4.280	4.505 / 4.565	4.220	8	11/16
5"	FLN**XY**250-700	9 1/16	1 1/16	7 13/16	1 13/16	3 5/8	5.320	5.568 / 5.628	5.283	10	11/16
6"	FLN**XY**250-800	10 1/8	1 3/16	8 7/8	2 1/16	3 7/8	6.360	6.630 / 6.690	6.251	12	11/16
8"	FLN**XY**250-900	12 3/8	1 5/16	11 1/16	2 5/16	4 3/8	8.330	8.630 / 8.690	8.251	14	11/16
10"	FLN**XY**250-1000	15	1 7/16	13 7/16	2 9/16	4 5/8	10.380	10.755 / 10.815	10.376	15	13/16
12"	FLN**XY**250-1100	17 5/8	1 1/2	16 1/16	2 3/4	5 1/8	12.250	12.755 / 12.815	12.250	18	13/16

*Replace **X** with the following codes for Material:*

*Stainless Steel 304 - **304***
*Stainless Steel 316 - **316***
*Stainless Steel 321 - **321***
*Stainless Steel 347 - **347***
*Carbon Steel - **CS***
*Aluminum - **A***
*Cuni 70/30 - **7***
*Cuni 90/10 - **9***

*Replace **Y** with the following codes for Type:*

*Socket Weld - **SW***
*Slip On - **SO***
*Blind - **BL***
*Weld Neck - **WN***
*Silver Brazed - **SB***
*Butterfy - **B***

SUNFLEX
METALLOY PVT. LTD.
AN ISO 9001:2015 CERTIFIED CO.

SUNFLEX
METALLOY PVT. LTD.
AN ISO 9001:2015 CERTIFIED CO.

QUICK REFERENCE PIPE / TUBING CHART

ANSI AND MIL-T-16420K

Nominal Pipe Size (NPS/IPS)	OD	Wall Thickness per ANSI B 36.19 (average)								Wall Thickness per MIL-T-16420K (minimum)					
		SCH 5s	SCH 10s	SCH 40s	STD	SCH 80s	XH	SCH 160	XXH	Class 50	Class 200	Class 700	Class 1650	Class 3300	Class 6000
1/8"	0.405		0.049	0.068	0.068	0.095	0.095							0.058	0.095
1/4"	0.540		0.065	0.088	0.088	0.119	0.119				0.065	0.065	0.042	0.072	0.120
3/8"	0.675		0.065	0.091	0.091	0.126	0.126				0.065	0.072	0.049	0.095	0.148
1/2"	0.840	0.065	0.083	0.109	0.109	0.147	0.147	0.187	0.294		0.065	0.072	0.058	0.120	0.203
3/4"	1.050	0.065	0.083	0.113	0.113	0.154	0.154	0.218	0.308		0.065	0.083	0.083	0.148	0.238
1"	1.315	0.065	0.109	0.133	0.133	0.179	0.179	0.250	0.358		0.065	0.095	0.095	0.180	0.300
1 1/4"	1.660	0.065	0.109	0.140	0.140	0.191	0.191	0.250	0.382		0.072	0.095	0.120	0.220	0.380
1 1/2"	1.900	0.065	0.109	0.145	0.145	0.200	0.200	0.281	0.400		0.072	0.109	0.134	0.250	0.425
2"	2.375	0.065	0.109	0.154	0.154	0.218	0.218	0.343	0.436		0.083	0.120	0.165	0.340	0.520
2 1/2"	2.875	0.083	0.120	0.203	0.203	0.276	0.276	0.375	0.552		0.083	0.134	0.203	0.380	0.630
3"	3.500	0.083	0.120	0.216	0.216	0.300	0.300	0.437	0.600		0.095	0.165	0.250	0.458	0.760
3 1/2"	4	0.083	0.120	0.226	0.226	0.318	0.318		0.636		0.095	0.180	0.284		
4"	4.500	0.083	0.120	0.237	0.237	0.337	0.337	0.531	0.674		0.109	0.203	0.340		
4 1/2"	5				0.247		0.355		0.710		0.120	0.203	0.380		
5"	5.563	0.109	0.134	0.258	0.258	0.375	0.375	0.625	0.750		0.125	0.220	0.425		
6"	6.625	0.109	0.134	0.280	0.280	0.432	0.432	0.718	0.864		0.134	0.259	0.457		
7"	7.625				0.301		0.500		0.875		0.134	0.284	0.526		
8"	8.625	0.109	0.148	0.322	0.322	0.500	0.500	0.906	0.875		0.148	0.340	0.595		
9"	9.625				0.342		0.500				0.187	0.340	0.664		
10"	10.750	0.134	0.165	0.365	0.365	0.593	0.500	1.125		0.134	0.187	0.380	0.741		
12"	12.750	0.156	0.180	0.375	0.375	0.687	0.500	1.312		0.156	0.250	0.454	0.879		
14"	14	0.156	0.188	0.375	0.375	0.750	0.500	1.406		0.165		0.473			
16"	16	0.165	0.188	0.375	0.375	0.843	0.500	1.593		0.165		0.534			
18"	18	0.165	0.188	0.375	0.375	0.937	0.500	1.781		0.180					
20"	20	0.188	0.218	0.375	0.375	1.031	0.500	1.968		0.180					
22"	22	0.188	0.218	0.375	0.375		0.500			0.180					
24"	24	0.218	0.250	0.375	0.375	1.218	0.500	2.343		0.250					
26"	26		0.312	0.375	0.375		0.500								
28"	28		0.312	0.375	0.375		0.500								
30"	30	0.250	0.312	0.375	0.375		0.500			0.250					
32"	32		0.312	0.375	0.375		0.500								
34"	34		0.344	0.375	0.375		0.500								
36"	36		0.312	0.375	0.375		0.500								
38"	38			0.375	0.375		0.500								
40"	40			0.375	0.375		0.500			0.312					
42"	42			0.375	0.375		0.500								
44"	44			0.375	0.375		0.500								

SUNFLEX
METALLOY PVT. LTD.
AN ISO 9001:2015 CERTIFIED CO.

SUNFLEX
METALLOY PVT. LTD.
AN ISO 9001:2015 CERTIFIED CO.

FLANGE CHART

150# COMMERCIAL

Specifcation: ANSI B16.5
NAVSEA DWG 803-6983512
Fig 39-E (SW) / 38-E (SO) / 36-E (BL) / 35-E (WN)

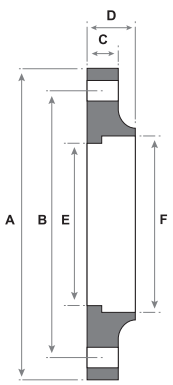

Socket Weld

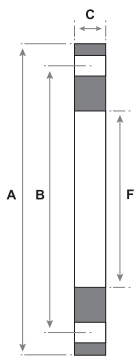

Slip-On

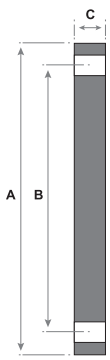

Blind

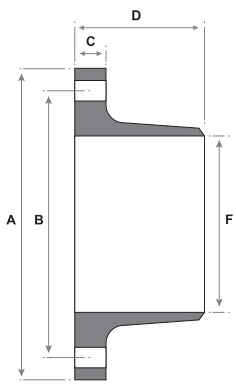

Weld Neck

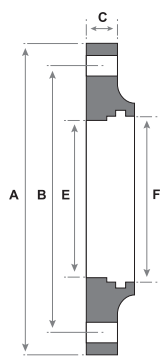

Sil Braze

SERVICE RATING TABLE	
FIGURE	Blind, Slip On, Socket Weld, Welding Neck
SIZE	1/2 to 12
WOG	150 PSI up to 425° F
STEAM	150 PSI up to 425° F

Flanges are available with either: Raised Face (RF) or Flat Face (FF)

150# ANSI B16.5 FLANGES											
SIZE	SMI P/N	A	C	B (Bolt Circle)	D (SW)	D (WN)	E (SW / SB)	F MIN / MAX (SW / SB / SO)	F (WN)	№ of Holes	Drill Size
1/2"	FLC**XYZ**-100	3 1/2	5/16	2 3/8	0.56	1.81	0.71	0.88	0.84	4	5/8
3/4"	FLC**XYZ**-150	3 7/8	11/32	2 3/4	0.56	2.00	0.92	1.09	1.05	4	5/8
1"	FLC**XYZ**-200	4 1/4	3/8	3 1/8	0.62	2.12	1.18	1.36	1.32	4	5/8
1 1/4"	FLC**XYZ**-250	4 5/8	13/32	3 1/2	0.75	2.19	1.53	1.70	1.66	4	5/8
1 1/2"	FLC**XYZ**-300	5	7/16	3 7/8	0.81	2.38	1.77	1.95	1.90	4	5/8
2"	FLC**XYZ**-400	6	1/2	4 3/4	0.94	2.44	2.24	2.44	2.38	4	3/4
2 1/2"	FLC**XYZ**-450	7	9/16	5 1/2	1.06	2.69	2.71	2.94	2.88	4	3/4
3"	FLC**XYZ**-500	7 1/2	5/8	6	1.12	2.69	3.31	3.57	3.50	4	3/4
3 1/2"	FLC**XYZ**-550	8 1/2	11/16	7	1.19	2.75	3.81	4.07	4.00	8	3/4
4"	FLC**XYZ**-600	9	11/16	7 1/2	1.25	2.94	4.28	4.57	4.50	8	3/4
5"	FLC**XYZ**-700	10	3/4	8 1/2	1.38	3.44	5.32	5.66	5.56	8	7/8
6"	FLC**XYZ**-800	11	13/16	9 1/2	1.50	3.44	6.36	6.72	6.63	8	7/8
8"	FLC**XYZ**-900	13 1/2	15/16	11 3/4	1.69	3.94	8.33	8.72	8.63	8	7/8
10"	FLC**XYZ**-1000	16	1	14 1/4	1.88	3.94	10.38	10.88	10.75	12	1
12"	FLC**XYZ**-1100	19	1 1/16	17	2.12	4.44	12.25	12.88	12.75	12	1

*Replace **X** with the following codes for Material:*

*Stainless Steel 304 - **304***
*Stainless Steel 316 - **316***
*Stainless Steel 321 - **321***
*Stainless Steel 347 - **347***
*Carbon Steel - **CS***
*Aluminum - **A***
*Cuni 70/30 - **7***
*Cuni 90/10 - **9***

*Replace **Y** with the following codes for Type:*

*Socket Weld - **SW***
*Slip On - **SO***
*Blind - **BL***
*Weld Neck - **WN***
*Silver Brazed - **SB***
*Butterfy - **B***

*Replace **Z** with the following codes for Pressure:*

150
300
600
900
1500

SUNFLEX
METALLOY PVT. LTD.
AN ISO 9001:2015 CERTIFIED CO.

SUNFLEX
METALLOY PVT. LTD.
AN ISO 9001:2015 CERTIFIED CO.

FLANGE CHART

150# NAVY

Specifcation: NAVSEA DWG 810-4715319
Fig 2A

NAVSEA DWG 803-6983512
Fig 16-D (SW) / 14-D (SO) / 13-D (BL) / 11-D (WN)

Flange Drilling: MIL-F-20042

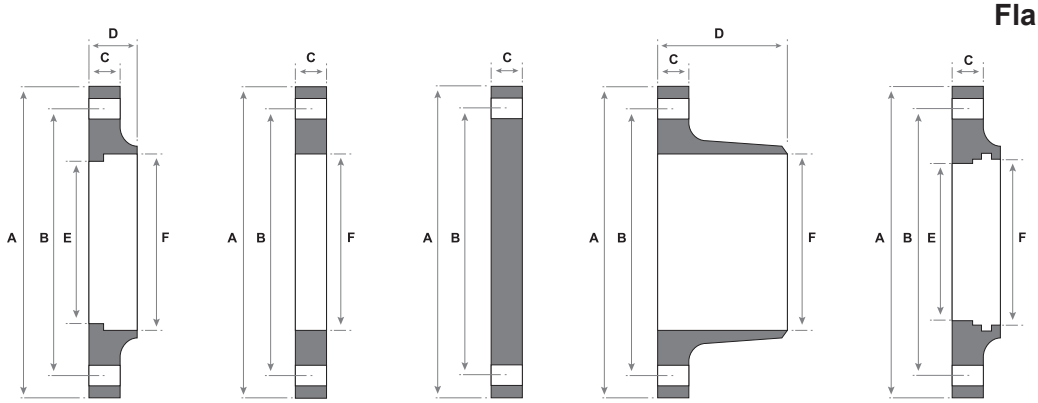

Socket Weld | Slip-On | Blind | Weld Neck | Sil Braze

SERVICE RATING TABLE		
FIGURE	Blind, Slip On, Socket Weld	Welding Neck
SIZE	1/4 to 12	2 to 12
WOG	150 PSI at 150° F	150 PSI at 150° F
STEAM	100 PSI at 425° F	100 PSI at 425° F

150# MIL-F-20042 FLANGES											
SIZE	SMI P/N	A	C	B (Bolt Circle)	D (SW)	D (WN)	E (SW / SB)	F MIN / MAX (SW / SB / SO)	F (WN)	№ of Holes	Drill Size
1/4"	FLN**XY**150-040	3 1/4	3/8	2 1/8	5/8		0.348	0.545 / 0.575		3	9/16
3/8"	FLN**XY**150-060	3 3/8	3/8	2 1/4	5/8		0.545	0.680 / 0.710		3	9/16
1/2"	FLN**XY**150-100	3 9/16	3/8	2 7/16	3/4		0.648	0.845 / 0.875		3	9/16
3/4"	FLN**XY**150-150	3 13/16	7/16	2 11/16	3/4		0.920	1.055 / 1.085		4	9/16
1"	FLN**XY**150-200	4 1/4	7/16	3 1/8	3/4		1.185	1.320 / 1.350		4	9/16
1 1/4"	FLN**XY**150-250	4 1/2	7/16	3 3/8	3/4		1.516	1.665 / 1.695		4	9/16
1 1/2"	FLN**XY**150-300	5 1/16	7/16	3 15/16	13/16		1.720	1.905 / 1.935		6	9/16
2"	FLN**XY**150-400	5 9/16	7/16	4 7/16	15/16	2 3/16	2.240	2.380 / 2.426	2.115	6	9/16
2 1/2"	FLN**XY**150-450	6 1/8	1/2	5	15/16	2 3/8	2.710	2.880 / 2.931	2.615	6	9/16
3"	FLN**XY**150-500	6 5/8	1/2	5 1/2	15/16	2 7/16	3.310	3.505 / 3.560	3.220	8	9/16
3 1/2"	FLN**XY**150-550	7 3/16	1/2	6 1/16	15/16	2 3/8	3.810	4.005 / 4.060	3.720	8	9/16
4"	FLN**XY**150-600	7 11/16	1/2	6 9/16	1 1/8	2 9/16	4.280	4.505 / 4.565	4.220	8	9/16
5"	FLN**XY**150-700	9 1/16	9/16	7 13/16	1 5/16	3 1/8	5.320	5.568 / 5.628	5.283	10	11/16
6"	FLN**XY**150-800	10 1/8	9/16	8 7/8	1 7/16	3 1/4	6.360	6.630 / 6.690	6.251	12	11/16
8"	FLN**XY**150-900	12 3/8	5/8	11 1/16	1 5/8	3 11/16	8.330	8.630 / 8.690	8.251	14	11/16
10"	FLN**XY**150-1000	15	11/16	13 7/16	1 13/16	3 7/8	10.380	10.755 / 10.815	10.376	15	13/16
12"	FLN**XY**150-1100	17 5/8	3/4	16 1/16	2	4 3/8	12.250	12.755 / 12.815	12.250	18	13/16

*Replace **X** with the following codes for Material:*

*Stainless Steel 304 - **304***
*Stainless Steel 316 - **316***
*Stainless Steel 321 - **321***
*Stainless Steel 347 - **347***
*Carbon Steel - **CS***
*Aluminum - **A***
*Cuni 70/30 - **7***
*Cuni 90/10 - **9***

*Replace **Y** with the following codes for Type:*

*Socket Weld - **SW***
*Slip On - **SO***
*Blind - **BL***
*Weld Neck - **WN***
*Silver Brazed - **SB***
*Butterfy - **B***

SUNFLEX
METALLOY PVT. LTD.
AN ISO 9001:2015 CERTIFIED CO.

SUNFLEX
METALLOY PVT. LTD.
AN ISO 9001:2015 CERTIFIED CO.

QUICK REFERENCE FLANGE CHART

ANSI B16.5 (COMMERCIAL) & MIL-F-20042 (NAVY)

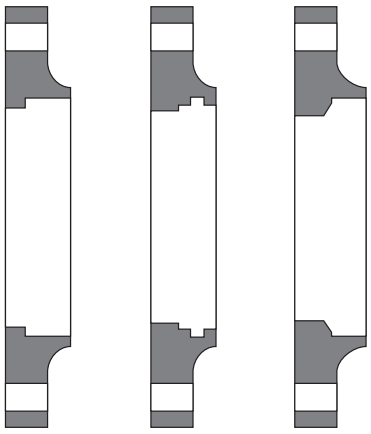

Socket Weld Sil Braze Butterfly

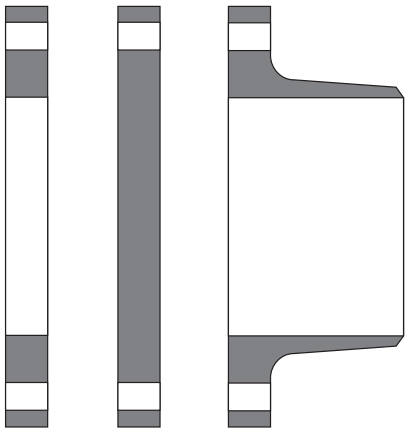

Slip-On Blind Weld Neck

150# MIL-F-20042 FLANGES

SIZE	Diameter	Thickness	Bolt Circle	№ of holes	Drill Size
1/4"	3 1/4	3/8	2 1/8	3	9/16
3/8"	3 3/8	3/8	2 1/4	3	9/16
1/2"	3 9/16	3/8	2 7/16	3	9/16
3/4"	3 13/16	7/16	2 11/16	4	9/16
1"	4 1/4	7/16	3 1/8	4	9/16
1 1/4"	4 1/2	7/16	3 3/8	4	9/16
1 1/2"	5 1/16	7/16	3 15/16	6	9/16
2"	5 9/16	7/16	4 7/16	6	9/16
2 1/2"	6 1/8	1/2	5	6	9/16
3"	6 5/8	1/2	5 1/2	8	9/16
3 1/2"	7 3/16	1/2	6 1/16	8	9/16
4"	7 11/16	1/2	6 9/16	8	9/16
5"	9 1/16	9/16	7 13/16	10	11/16
6"	10 1/8	9/16	8 7/8	12	11/16
8"	12 3/8	5/8	11 1/16	14	11/16
10"	15	11/16	13 7/16	15	13/16
11"	16 9/16	11/16	15	16	13/16
12"	17 5/8	3/4	16 1/16	18	13/16

150# ANSI B16.5 FLANGES

SIZE	Diameter	Thickness	Bolt Circle	№ of holes	Drill Size
1/2"	3 1/2	5/16	2 3/8	4	5/8
3/4"	3 7/8	11/32	2 3/4	4	5/8
1"	4 1/4	3/8	3 1/8	4	5/8
1 1/4"	4 5/8	13/32	3 1/2	4	5/8
1 1/2"	5	7/16	3 7/8	4	5/8
2"	6	1/2	4 3/4	4	3/4
2 1/2"	7	9/16	5 1/2	4	3/4
3"	7 1/2	5/8	6	4	3/4
3 1/2"	8 1/2	11/16	7	8	3/4
4"	9	11/16	7 1/2	8	3/4
5"	10	3/4	8 1/2	8	7/8
6"	11	13/16	9 1/2	8	7/8
8"	13 1/2	15/16	11 3/4	8	7/8
10"	16	1	14 1/4	12	1
12"	19	1 1/16	17	12	1

250# MIL-F-20042 FLANGES

SIZE	Diameter	Thickness	Bolt Circle	№ of holes	Drill Size
1/4"	3 1/4	11/16	2 1/8	3	9/16
3/8"	3 3/8	11/16	2 1/8	3	9/16
1/2"	3 9/16	11/16	2 7/16	3	9/16
3/4"	3 13/16	11/16	2 11/16	4	9/16
1"	4 1/4	3/4	3 1/8	4	9/16
1 1/4"	4 1/2	13/16	3 3/8	4	9/16
1 1/2"	5 1/16	13/16	3 15/16	6	9/16
2"	5 9/16	13/16	4 7/16	6	11/16
2 1/2"	6 1/8	15/16	5	6	11/16
3"	6 5/8	15/16	5 1/2	8	11/16
3 1/2"	7 3/16	1	6 1/16	8	11/16
4"	7 11/16	1	6 9/16	8	11/16
5"	9 1/16	1 1/16	7 13/16	10	11/16
6"	10 1/8	1 3/16	8 7/8	12	11/16
8"	12 3/8	1 5/16	11 1/16	14	11/16
10"	15	1 7/16	13 7/16	15	13/16
12"	17 5/8	1 1/2	16 1/16	18	13/16

400# MIL-F-20042 FLANGES

SIZE	Diameter	Thickness	Bolt Circle	№ of holes	Drill Size
1/4"	3 3/4	11/16	2 5/8	3	9/16
3/8"	3 7/8	11/16	2 3/4	4	9/16
1/2"	4	11/16	2 7/8	4	9/16
3/4"	4 5/16	11/16	3 3/16	4	9/16
1"	5 1/16	3/4	3 3/4	5	11/16
1 1/4"	5 3/8	13/16	4 1/16	5	11/16
1 1/2"	5 15/16	13/16	4 5/8	6	11/16
2"	6 1/2	13/16	5 3/16	7	11/16
2 1/2"	7 9/16	15/16	6	8	13/16
3"	8 1/8	15/16	6 9/16	8	13/16
3 1/2"	8 11/16	1	7 1/8	9	13/16
4"	9 1/4	1	7 11/16	9	13/16
5"	10 3/8	1 1/16	8 13/16	11	13/16
6"	11 15/16	1 3/16	10 3/16	12	15/16
8"	14 3/4	1 5/16	12 3/4	13	1 1/16
10"	17	1 7/16	15	15	1 1/16

SUNFLEX
METALLOY PVT. LTD.
AN ISO 9001:2015 CERTIFIED CO.

SUNFLEX
METALLOY PVT. LTD.
AN ISO 9001:2015 CERTIFIED CO.

45° ELBOW

BELLED END

Specifcation: DWG 802-5959353 / MSS-SP-119

Pressure Rating: 200 PSIG (WOG)

Intended for use with Class 200 Copper Nickel Tube IAW MIL-T-16420

SERVICE RATING TABLE		
Nominal Pipe Size (INCHES)	Maximum Working Pressure (LB/IN^2)	Maximum Temperature (°F)
1/4 through 12	200	150

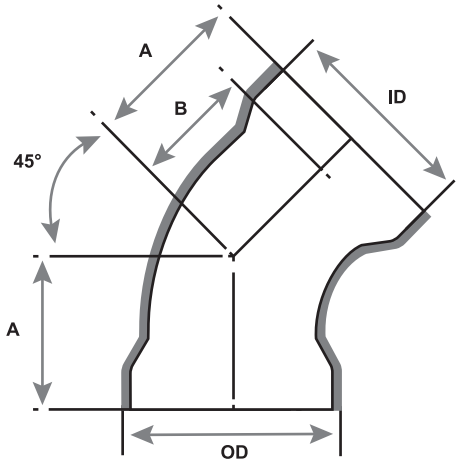



90/10 CUNI
(ALLOY C70600)



70/30 CUNI
(ALLOY C71500)

AVAILABLE ALLOYS: CUNI 90/10 & CUNI 70/30

NOMINAL PIPE SIZE	SMI P/N(90/10)	SMI P/N (70/30)	ID	OD MIN	A	
1/4"	49BE040	47BE040	0.540	0.670	1.24	0.920
3/8"	49BE060	47BE060	0.675	0.805	1.24	0.920
1/2"	49BE100	47BE100	0.840	0.970	1.38	1.060
3/4"	49BE150	47BE150	1.050	1.180	1.38	1.060
1"	49BE200	47BE200	1.315	1.445	1.5	1.120
1 1/4"	49BE250	47BE250	1.660	1.804	1.78	1.340
1 1/2"	49BE300	47BE300	1.900	2.044	2.19	1.620
2"	49BE400	47BE400	2.375	2.541	2.53	1.970
2 1/2"	49BE450	47BE450	2.875	3.041	3.19	2.44
3"	49BE500	47BE500	3.500	3.690	3.52	2.76
3 1/2"	49BE550	47BE550	4.000	4.190	3.96	3.17
4"	49BE600	47BE600	4.500	4.718	4.27	3.45
5"	49BE700	47BE700	5.563	5.813	5.14	4.2
6"	49BE800	47BE800	6.625	6.893	5.91	4.91
8"	49BE900	47BE900	8.625	8.927	7.59	6.34
10"	49BE1000	47BE1000	10.750	11.124	9.22	7.78
12"	49BE1100	47BE1100	12.75	13.250	10.7	9.14

NOTES: Fittings may be ordered with reduced ends. Sizes not shown may be available upon request. Dimension shown refect NAVSEA DWG 802-5959353, App. B

SUNFLEX
METALLOY PVT. LTD.
AN ISO 9001:2015 CERTIFIED CO.

SUNFLEX
METALLOY PVT. LTD.
AN ISO 9001:2015 CERTIFIED CO.

CONCENTRIC REDUCER

BELLED END

Specifcation: DWG 802-5959353 / MSS-SP-119

Pressure Rating: 200 PSIG (WOG)

Intended for use with Class 200 Copper Nickel Tube IAW MIL-T-16420

SERVICE RATING TABLE		
Nominal Pipe Size (INCHES)	Maximum Working Pressure (LB/IN^2)	Maximum Temperature (°F)
1/4 through 12	200	150

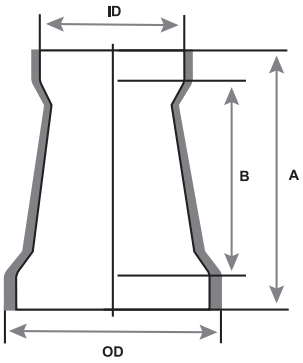



90/10 CUNI
(ALLOY C70600)



70/30 CUNI
(ALLOY C71500)

AVAILABLE ALLOYS: CUNI 90/10 & CUNI 70/30

NOMINAL PIPE SIZE	ID	OD MIN
1/4"	0.540	0.670
3/8"	0.675	0.805
1/2"	0.840	0.970
3/4"	1.050	1.180
1"	1.315	1.445
1 1/4"	1.660	1.804
1 1/2"	1.900	2.044
2"	2.375	2.541
2 1/2"	2.875	3.041
3"	3.500	3.690
3 1/2"	4.000	4.190
4"	4.500	4.718
5"	5.563	5.813
6"	6.625	6.893
8"	8.625	8.927
10"	10.750	11.124
12"	12.75	13.250

NOMINAL PIPE SIZE	SMI P/N (90/10)	SMI P/N (70/30)	A	B
3/8 x 1/4"	CR9BE060-040	CR7BE060-040	1.84	1.22
1/2 x 1/4"	CR9BE100-040	CR7BE100-040	1.9	1.27
1/2 x 3/8"	CR9BE100-060	CR7BE100-060	1.9	1.27
3/4 x 1/4"	CR9BE150-040	CR7BE150-040	1.9	1.27
3/4 x 3/8"	CR9BE150-060	CR7BE150-060	1.9	1.27
3/4 x 1/2"	CR9BE150-100	CR7BE150-100	1.9	1.27
1 x 1/4"	CR9BE200-040	CR7BE200-040	2.6	1.91
1 x 3/8"	CR9BE200-060	CR7BE200-060	2.6	1.91
1 x 1/2"	CR9BE200-100	CR7BE200-100	2.6	1.91
1 x 3/4"	CR9BE200-150	CR7BE200-150	2.6	1.91
1 1/4 x 1/4"	CR9BE250-040	CR7BE250-040	2.75	2
1 1/4 x 3/8"	CR9BE250-060	CR7BE250-060	2.75	2
1 1/4 x 1/2"	CR9BE250-100	CR7BE250-100	2.75	2
1 1/4 x 3/4"	CR9BE250-150	CR7BE250-150	2.75	2
1 1/4 x 1"	CR9BE250-200	CR7BE250-200	2.75	1.94
1 1/2 x 1/4"	CR9BE300-040	CR7BE300-040	3.37	2.5
1 1/2 x 3/8"	CR9BE300-060	CR7BE300-060	3.37	2.5

NOTES: Fittings may be ordered with reduced ends. Sizes not shown may be available upon request.
Dimension shown refect NAVSEA DWG 802-5959353, App. B

SUNFLEX
METALLOY PVT. LTD.
AN ISO 9001:2015 CERTIFIED CO.

CONCENTRIC REDUCER

BELLED END

Specifcation: DWG 802-5959353 / MSS-SP-119

Pressure Rating: 200 PSIG (WOG)

Intended for use with Class 200 Copper Nickel Tube IAW MIL-T-16420

SERVICE RATING TABLE		
Nominal Pipe Size (INCHES)	Maximum Working Pressure (LB/IN^2)	Maximum Temperature (°F)
1/4 through 12	200	150



90/10 CUNI (ALLOY C70600)



70/30 CUNI (ALLOY C71500)

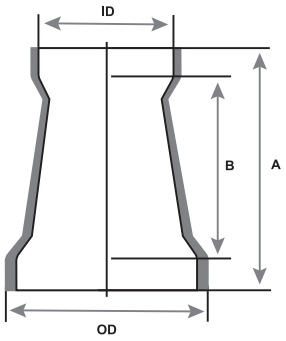

NOMINAL PIPE SIZE	ID	OD MIN
1/4"	0.540	0.670
3/8"	0.675	0.805
1/2"	0.840	0.970
3/4"	1.050	1.180
1"	1.315	1.445
1 1/4"	1.660	1.804
1 1/2"	1.900	2.044
2"	2.375	2.541
2 1/2"	2.875	3.041
3"	3.500	3.690
3 1/2"	4.000	4.190
4"	4.500	4.718
5"	5.563	5.813
6"	6.625	6.893
8"	8.625	8.927
10"	10.750	11.124
12"	12.75	13.250

AVAILABLE ALLOYS: CUNI 90/10 & CUNI 70/30

NOMINAL PIPE SIZE	SMI P/N (90/10)	SMI P/N (70/30)	A	B
1 1/2 x 1/2"	CR9BE300-100	CR7BE300-100	3.37	2.5
1 1/2 x 3/4"	CR9BE300-150	CR7BE300-150	3.37	2.5
1 1/2 x 1"	CR9BE300-200	CR7BE300-200	3.37	2.44
1 1/2 x 1 1/4"	CR9BE300-250	CR7BE300-250	3.37	2.37
2 x 1/2"	CR9BE400-100	CR7BE400-100	3.84	2.97
2 x 3/4"	CR9BE400-150	CR7BE400-150	3.84	2.97
2 x 1"	CR9BE400-200	CR7BE400-200	3.84	2.9
2 x 1 1/4"	CR9BE400-250	CR7BE400-250	3.84	2.84
2 x 1 1/2"	CR9BE400-300	CR7BE400-300	3.84	2.72
2 1/2 x 1"	CR9BE450-200	CR7BE450-200	4.34	3.15
2 1/2 x 1 1/4"	CR9BE450-250	CR7BE450-250	4.34	3.15
2 1/2 x 1 1/2"	CR9BE450-300	CR7BE450-300	4.34	3.03
2 1/2 x 2"	CR9BE450-400	CR7BE450-400	4.34	3.03
3 1/2 x 1 1/2"	CR9BE350-300	CR7BE350-300	5.25	3.78
3 1/2 x 2"	CR9BE350-400	CR7BE350-400	5.25	3.78
3 1/2 x 2 1/2"	CR9BE350-450	CR7BE350-450	5.25	3.59
3 1/2 x 3"	CR9BE350-500	CR7BE350-500	5.25	3.59
4 x 2"	CR9BE600-400	CR7BE600-400	5.25	3.87
4 x 2 1/2"	CR9BE600-450	CR7BE600-450	5.25	3.69

NOTES: Fittings may be ordered with reduced ends.
Sizes not shown may be available upon request.
Dimension shown refect NAVSEA DWG 802-5959353, App. B

SUNFLEX
METALLOY PVT. LTD.
AN ISO 9001:2015 CERTIFIED CO.

CONCENTRIC REDUCER

BELLED END

Specifcation: DWG 802-5959353 / MSS-SP-119
Pressure Rating: 200 PSIG (WOG)

Intended for use with Class 200 Copper Nickel Tube IAW MIL-T-16420

SERVICE RATING TABLE		
Nominal Pipe Size (INCHES)	Maximum Working Pressure (LB/IN^2)	Maximum Temperature (°F)
1/4 through 12	200	150



90/10 CUNI (ALLOY C70600)



70/30 CUNI (ALLOY C71500)

AVAILABLE ALLOYS: CUNI 90/10 & CUNI 70/30

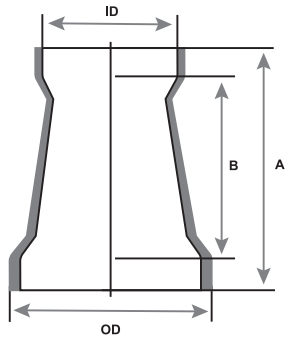

NOMINAL PIPE SIZE	ID	OD MIN
1/4"	0.540	0.670
3/8"	0.675	0.805
1/2"	0.840	0.970
3/4"	1.050	1.180
1"	1.315	1.445
1 1/4"	1.660	1.804
1 1/2"	1.900	2.044
2"	2.375	2.541
2 1/2"	2.875	3.041
3"	3.500	3.690
3 1/2"	4.000	4.190
4"	4.500	4.718
5"	5.563	5.813
6"	6.625	6.893
8"	8.625	8.927
10"	10.750	11.124
12"	12.75	13.250

NOMINAL PIPE SIZE	SMI P/N (90/10)	SMI P/N (70/30)	A	B
4 x 3"	CR9BE600-500	CR7BE600-500	5.25	3.69
4 x 3 1/2"	CR9BE600-550	CR7BE600-550	5.25	3.66
5 x 2 1/2"	CR9BE700-450	CR7BE700-450	6.32	4.63
5 x 3"	CR9BE700-500	CR7BE700-500	6.32	4.63
5 x 3 1/2"	CR9BE700-550	CR7BE700-550	6.32	4.66
5 x 4"	CR9BE700-600	CR7BE700-600	6.32	4.57
6 x 2 1/2"	CR9BE800-450	CR7BE800-450	6.8	5.12
6 x 3"	CR9BE800-500	CR7BE800-500	6.8	5.05
6 x 3 1/2"	CR9BE800-550	CR7BE800-550	6.8	5.02
6 x 4"	CR9BE800-600	CR7BE800-600	6.8	4.99
6 x 5"	CR9BE800-700	CR7BE800-700	6.8	4.86
8 x 4"	CR9BE900-600	CR7BE900-600	7.45	5.39
8 x 5"	CR9BE900-700	CR7BE900-700	7.45	5.26
8 x 6"	CR9BE900-800	CR7BE900-800	7.45	5.2
10 x 5"	CR9BE1000-700	CR7BE1000-700	8.75	6.38
10 x 6"	CR9BE1000-800	CR7BE1000-800	8.75	6.32
10 x 8"	CR9BE1000-900	CR7BE1000-900	8.75	6.06
12 x 6"	CR9BE1000-800	CR7BE1000-800	9.87	7.31
12 x 8"	CR9BE1100-900	CR7BE1100-900	9.87	7.06
12 x 10"	CR9BE1100-1000	CR7BE1100-1000	9.87	6.87

NOTES: Fittings may be ordered with reduced ends.
Sizes not shown may be available upon request.
Dimension shown refect NAVSEA DWG 802-5959353, App. B

SUNFLEX
METALLOY PVT. LTD.
AN ISO 9001:2015 CERTIFIED CO.

90° ELBOW LONG RADIUS

BELLED END

Specifcation: DWG 802-5959353 / MSS-SP-119

Pressure Rating: 200 PSIG (WOG)

Intended for use with Class 200 Copper Nickel Tube IAW MIL-T-16420

SERVICE RATING TABLE		
Nominal Pipe Size (INCHES)	Maximum Working Pressure (LB/IN^2)	Maximum Temperature (°F)
1/4 through 12	200	150

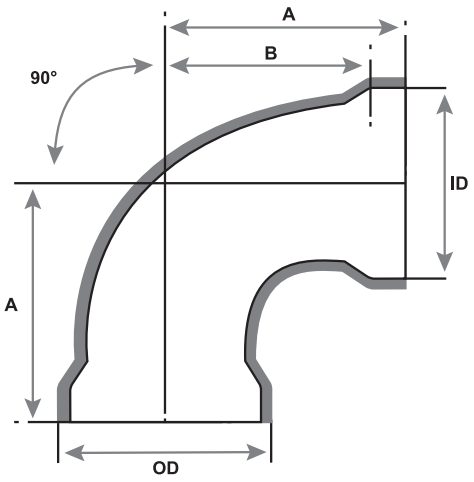



90/10 CUNI (ALLOY C70600)



70/30 CUNI (ALLOY C71500)

AVAILABLE ALLOYS: CUNI 90/10 & CUNI 70/30

NOMINAL PIPE SIZE	SMI P/N (90/10)	SMI P/N (70/30)	ID	OD MIN	A	B
1/4"	9L9BE040	9L7BE040	0.540	0.670	2.12	1.800
3/8"	9L9BE060	9L7BE060	0.675	0.805	2.12	1.800
1/2"	9L9BE100	9L7BE100	0.840	0.970	2.25	1.940
3/4"	9L9BE150	9L7BE150	1.050	1.180	2.25	1.940
1"	9L9BE200	9L7BE200	1.315	1.445	2.38	2.000
1 1/4"	9L9BE250	9L7BE250	1.660	1.804	2.88	2.440
1 1/2"	9L9BE300	9L7BE300	1.900	2.044	3.5	2.940
2"	9L9BE400	9L7BE400	2.375	2.541	4.28	3.720
2 1/2"	9L9BE450	9L7BE450	2.875	3.041	5.38	4.62
3"	9L9BE500	9L7BE500	3.500	3.690	6.17	5.41
3 1/2"	9L9BE550	9L7BE550	4.000	4.190	6.98	6.18
4"	9L9BE600	9L7BE600	4.500	4.718	7.78	6.97
5"	9L9BE700	9L7BE700	5.563	5.813	9.53	8.59
6"	9L9BE800	9L7BE800	6.625	6.893	11.17	10.17
8"	9L9BE900	9L7BE900	8.625	8.927	14.62	13.38
10"	9L9BE1000	9L7BE1000	10.750	11.124	18	16.56
12"	9L9BE1100	9L7BE1100	12.75	13.250	21.25	19.69

NOTES: Fittings may be ordered with reduced ends. Sizes not shown may be available upon request. Dimension shown refect NAVSEA DWG 802-5959353, App. B

SUNFLEX
METALLOY PVT. LTD.
AN ISO 9001:2015 CERTIFIED CO.

SUNFLEX
METALLOY PVT. LTD.
AN ISO 9001:2015 CERTIFIED CO.

90° ELBOW SHORT RADIUS

BELLED END

Specifcation: DWG 802-5959353 / MSS-SP-119

Pressure Rating: 200 PSIG (WOG)

Intended for use with Class 200 Copper Nickel Tube IAW MIL-T-16420

SERVICE RATING TABLE		
Nominal Pipe Size (INCHES)	Maximum Working Pressure (LB/IN^2)	Maximum Temperature (°F)
1/4 through 12	200	150

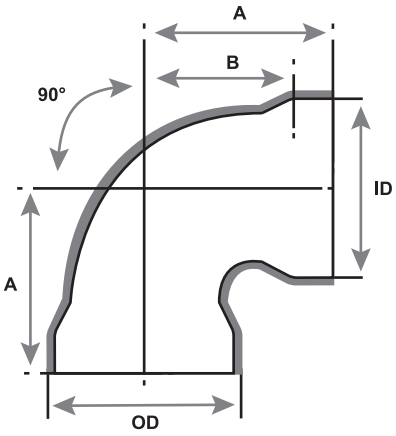



90/10 CUNI (ALLOY C70600)



70/30 CUNI (ALLOY C71500)

AVAILABLE ALLOYS: CUNI 90/10 & CUNI 70/30

NOMINAL PIPE SIZE	SMI P/N (90/10)	SMI P/N (70/30)	ID	OD MIN	A	B
1"	9S9BE200	9S7BE200	1.315	1.445	1.810	1.430
1 1/4"	9S9BE250	9S7BE250	1.660	1.804	2.000	1.560
1 1/2"	9S9BE300	9S7BE200	1.900	2.044	2.620	2.060
2"	9S9BE400	9S7BE400	2.375	2.541	3.120	2.560
2 1/2"	9S9BE450	9S7BE450	2.875	3.041	4.000	3.250
3"	9S9BE500	9S7BE500	3.500	3.690	4.500	3.750
3 1/2"	9S9BE550	9S7BE550	4.000	4.190	5.060	4.310
4"	9S9BE600	9S7BE600	4.500	4.718	5.620	4.800
5"	9S9BE700	9S7BE700	5.563	5.813	6.75	5.81
6"	9S9BE800	9S7BE800	6.625	6.893	7.81	6.81
8"	9S9BE900	9S7BE900	8.625	8.927	10.19	8.94
10"	9S9BE1000	9S7BE1000	10.750	11.124	12.5	11.06
12"	9S9BE1100	9S7BE1100	12.75	13.250	14.62	13.06

NOTES: Fittings may be ordered with reduced ends. Sizes not shown may be available upon request. Dimension shown refect NAVSEA DWG 802-5959353, App. B

SUNFLEX
METALLOY PVT. LTD.
AN ISO 9001:2015 CERTIFIED CO.

SUNFLEX
METALLOY PVT. LTD.
AN ISO 9001:2015 CERTIFIED CO.

STREET CONCENTRIC REDUCER

PLAIN X BELLED END

Specifcation: DWG 802-5959353 / MSS-SP-119

Pressure Rating: 200 PSIG (WOG)

Intended for use with Class 200 Copper Nickel Tube IAW MIL-T-16420

SERVICE RATING TABLE		
Nominal Pipe Size (INCHES)	Maximum Working Pressure (LB/IN^2)	Maximum Temperature (°F)
1/4 through 12	200	150

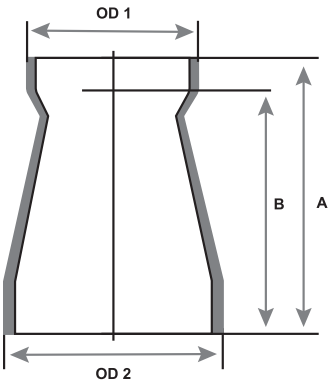



90/10 CUNI (ALLOY C70600)



70/30 CUNI (ALLOY C71500)

AVAILABLE ALLOYS: CUNI 90/10 & CUNI 70/30

NOMINAL PIPE SIZE	SMI P/N (90/10)	SMI P/N (70/30)	OD 1 (FEMALE)	OD 2 (MALE)	A	B
3/8 x 1/4"	STCR9BE060-040	STCR7BE060-040	0.540	0.675	1.84	1.52
1/2 x 1/4"	STCR9BE100-040	STCR7BE100-040	0.540	0.840	1.9	1.58
1/2 x 3/8"	STCR9BE100-060	STCR7BE100-060	0.675	0.840	1.9	1.58
3/4 x 1/4"	STCR9BE150-040	STCR7BE150-040	0.540	1.050	1.9	1.58
3/4 x 3/8"	STCR9BE150-060	STCR7BE150-060	0.675	1.050	1.9	1.58
3/4 x 1/2"	STCR9BE150-100	STCR7BE150-060	0.840	1.050	1.9	1.58
1 x 1/4"	STCR9BE200-040	STCR7BE200-040	0.540	1.315	2.6	2.28
1 x 3/8"	STCR9BE200-060	STCR7BE200-060	0.675	1.315	2.6	2.28
1 x 1/2"	STCR9BE200-100	STCR7BE200-100	0.840	1.315	2.6	2.28
1 x 3/4"	STCR9BE200-150	STCR7BE200-150	1.050	1.315	2.6	2.28
1 1/4 x 1/4"	STCR9BE250-040	STCR7BE250-040	0.540	1.660	2.75	2.43
1 1/4 x 3/8"	STCR9BE250-060	STCR7BE250-060	0.675	1.660	2.75	2.43
1 1/4 x 1/2"	STCR9BE250-100	STCR7BE250-100	0.840	1.660	2.75	2.43
1 1/4 x 3/4"	STCR9BE250-150	STCR7BE250-150	1.050	1.660	2.75	2.43
1 1/4 x 1"	STCR9BE250-200	STCR7BE250-200	1.315	1.660	2.75	2.37
1 1/2 x 1/4"	STCR9BE300-040	STCR7BE300-040	0.540	1.900	3.37	3.05
1 1/2 x 3/8"	STCR9BE300-060	STCR7BE300-060	0.675	1.900	3.37	3.05

NOTES: Fittings may be ordered with reduced ends. Sizes not shown may be available upon request. Dimension shown refect NAVSEA DWG 802-5959353, App. B

SUNFLEX
METALLOY PVT. LTD.
AN ISO 9001:2015 CERTIFIED CO.

STREET CONCENTRIC REDUCER

PLAIN X BELLED END

Specifcation: DWG 802-5959353 / MSS-SP-119

Pressure Rating: 200 PSIG (WOG)

Intended for use with Class 200 Copper Nickel Tube IAW MIL-T-16420

SERVICE RATING TABLE		
Nominal Pipe Size (INCHES)	Maximum Working Pressure (LB/IN^2)	Maximum Temperature (°F)
1/4 through 12	200	150

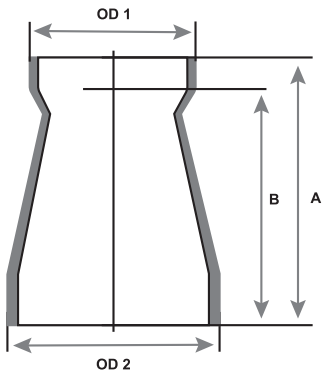



90/10 CUNI (ALLOY C70600)



70/30 CUNI (ALLOY C71500)

AVAILABLE ALLOYS: CUNI 90/10 & CUNI 70/30

NOMINAL PIPE SIZE	SMI P/N (90/10)	SMI P/N (70/30)	OD 1 (FEMALE)	OD 2 (MALE)	A	B
1 1/2 x 1/2"	STCR9BE300-100	STCR7BE300-100	0.840	1.900	3.37	3.05
1 1/2 x 3/4"	STCR9BE300-150	STCR7BE300-150	1.050	1.900	3.37	3.05
1 1/2 x 1"	STCR9BE300-200	STCR7BE300-200	1.315	1.900	3.37	3
1 1/2 x 1 1/4"	STCR9BE300-250	STCR7BE300-250	1.660	1.900	3.37	2.93
2 x 1/2"	STCR9BE400-100	STCR7BE400-100	0.840	2.375	3.84	3.52
2 x 3/4"	STCR9BE400-150	STCR7BE400-150	1.050	2.375	3.84	3.52
2 x 1"	STCR9BE400-200	STCR7BE400-200	1.315	2.375	3.84	3.46
2 x 1 1/4"	STCR9BE400-250	STCR7BE400-250	1.660	2.375	3.84	3.4
2 x 1 1/2"	STCR9BE400-300	STCR7BE400-300	1.900	2.375	3.84	3.28
2 1/2 x 1"	STCR9BE450-200	STCR7BE450-200	1.315	2.375	4.53	4.15
2 1/2 x 1 1/4"	STCR9BE450-250	STCR7BE450-250	1.660	2.875	4.53	4.09
2 1/2 x 1 1/2"	STCR9BE450-300	STCR7BE450-300	1.90	2.875	4.53	3.97
2 1/2 x 2"	STCR9BE450-400	STCR7BE450-400	2.375	2.875	4.53	3.97
3 x 1"	STCR9BE500-200	STCR7BE500-200	1.315	3.500	4.72	4.34
3 x 1 1/4"	STCR9BE500-250	STCR7BE500-250	1.660	3.500	4.72	4.28
3 x 1 1/2"	STCR9BE500-300	STCR7BE500-300	1.900	3.500	4.72	4.16
3 x 2"	STCR9BE500-400	STCR7BE500-400	2.375	3.500	4.72	4.16
3 x 2 1/2"	STCR9BE500-450	STCR7BE500-450	2.875	3.500	4.72	3.97
3 1/2 x 1 1/2"	STCR9BE550-300	STCR7BE550-300	1.900	4.000	5.25	4.69
3 1/2 x 2"	STCR9BE550-400	STCR7BE550-400	2.375	4.000	5.25	4.69
3 1/2 x 2 1/2"	STCR9BE550-450	STCR7BE550-450	2.875	4.000	5.25	4.5
3 1/2 x 3"	STCR9BE550-500	STCR7BE550-500	3.500	4.000	5.25	4.57
4 x 2"	STCR9BE600-400	STCR7BE600-400	2.375	4.500	5.25	4.69

NOTES: Fittings may be ordered with reduced ends. Sizes not shown may be available upon request. Dimension shown refect NAVSEA DWG 802-5959353, App. B

SUNFLEX
METALLOY PVT. LTD.
AN ISO 9001:2015 CERTIFIED CO.

STREET CONCENTRIC REDUCER

PLAIN X BELLED END

Specifcation: DWG 802-5959353 / MSS-SP-119

Pressure Rating: 200 PSIG (WOG)

Intended for use with Class 200 Copper Nickel Tube IAW MIL-T-16420

SERVICE RATING TABLE		
Nominal Pipe Size (INCHES)	Maximum Working Pressure (LB/IN^2)	Maximum Temperature (°F)
1/4 through 12	200	150

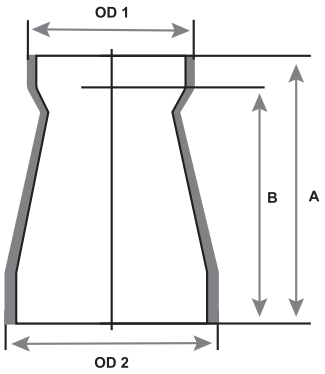



90/10 CUNI (ALLOY C70600)



70/30 CUNI (ALLOY C71500)

AVAILABLE ALLOYS: CUNI 90/10 & CUNI 70/30

NOMINAL PIPE SIZE	SMI P/N (90/10)	SMI P/N (70/30)	OD 1 (FEMALE)	OD 2 (MALE)	A	B
4 x 2 1/2"	STCR9BE600-450	STCR7BE600-450	2.875	4.500	5.25	4.5
4 x 3"	STCR9BE600-500	STCR7BE600-500	3.500	4.500	5.25	4.5
4 x 3 1/2"	STCR9BE600-550	STCR7BE600-550	4.000	4.500	5.25	4.5
5 x 2 1/2"	STCR9BE700-450	STCR7BE700-450	2.875	5.563	6.32	5.57
5 x 3"	STCR9BE700-500	STCR7BE700-500	3.500	5.563	6.32	5.57
5 x 3 1/2"	STCR9BE700-550	STCR7BE700-550	4.000	5.563	6.32	5.53
5 x 4"	STCR9BE700-600	STCR7BE700-600	4.500	5.563	6.32	5.5
6 x 2 1/2"	STCR9BE800-450	STCR7BE800-450	2.875	6.625	6.8	6.05
6 x 3"	STCR9BE800-500	STCR7BE800-500	3.500	6.625	6.8	6.05
6 x 3 1/2"	STCR9BE800-550	STCR7BE800-550	4.000	6.625	6.8	6.01
6 x 4"	STCR9BE800-600	STCR7BE800-600	4.500	6.625	6.8	5.98
6 x 5"	STCR9BE800-700	STCR7BE800-700	5.563	6.625	6.8	5.86
8 x 4"	STCR9BE900-600	STCR7BE900-600	4.500	8.625	7.45	6.63
8 x 5"	STCR9BE900-700	STCR7BE900-700	5.563	8.625	7.45	6.51
8 x 6"	STCR9BE900-800	STCR7BE900-800	6.625	8.625	7.45	6.45
10 x 5"	STCR9BE1000-700	STCR7BE1000-700	10.750	10.750	8.75	7.81
10 x 6"	STCR9BE1000-800	STCR7BE1000-800	6.625	10.750	8.75	7.75
10 x 8"	STCR9BE1000-900	STCR7BE1000-900	8.625	10.750	8.75	7.5
12 x 6"	STCR9BE1100-800	STCR7BE1100-800	6.625	12.750	9.87	8.87
12 x 8"	STCR9BE1100-900	STCR7BE1100-900	8.625	12.750	9.87	8.62
12 x 10"	STCR9BE1100-1000	STCR7BE1100-1000	10.750	12.750	9.87	8.43

NOTES: Fittings may be ordered with reduced ends. Sizes not shown may be available upon request. Dimension shown refect NAVSEA DWG 802-5959353, App. B

SUNFLEX
METALLOY PVT. LTD.
AN ISO 9001:2015 CERTIFIED CO.

STREET LONG RADIUS 90° ELBOW

PLAIN X BELLED END

Specifcation: DWG 802-5959353 / MSS-SP-119

Pressure Rating: 200 PSIG (WOG)

Intended for use with Class 200 Copper Nickel Tube IAW MIL-T-16420

SERVICE RATING TABLE		
Nominal Pipe Size (INCHES)	Maximum Working Pressure (LB/IN^2)	Maximum Temperature (°F)
1/4 through 12	200	150

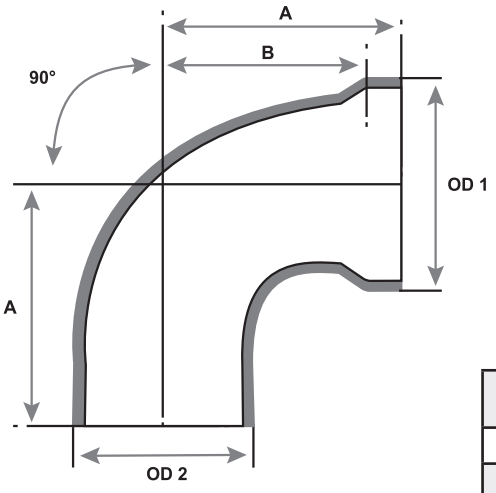



90/10 CUNI
(ALLOY C70600)



70/30 CUNI
(ALLOY C71500)

AVAILABLE ALLOYS: CUNI 90/10 & CUNI 70/30

NOMINAL PIPE SIZE	SMI P/N (90/10)	SMI P/N (70/30)	OD 1 (FEMALE)	OD 2 (MALE)	A	B
1"	ST9L9BE200	ST9L7BE200	1.445	1.315	2.380	2.00
1 1/4"	ST9L9BE250	ST9L7BE250	1.804	1.660	2.880	2.440
1 1/2"	ST9L9BE300	ST9L7BE300	2.044	1.900	3.500	2.940
2"	ST9L9BE400	ST9L7BE400	2.541	2.375	4.280	3.720
2 1/2"	ST9L9BE450	ST9L7BE450	3.041	2.875	5.380	4.620
3"	ST9L9BE500	ST9L7BE500	3.690	3.500	6.170	5.410
3 1/2"	ST9L9BE550	ST9L7BE550	4.190	4.000	6.980	6.180
4"	ST9L9BE600	ST9L7BE600	4.718	4.500	7.780	6.970
5"	ST9L9BE700	ST9L7BE700	5.813	5.563	9.53	8.59
6"	ST9L9BE800	ST9L7BE800	6.893	6.625	11.17	10.17
8"	ST9L9BE900	ST9L7BE900	8.927	8.625	14.62	13.38
10"	ST9L9BE1000	ST9L7BE1000	11.124	10.750	18	16.56
12"	ST9L9BE1100	ST9L7BE1100	13.250	12.750	21.25	19.69

NOTES: Fittings may be ordered with reduced ends. Sizes not shown may be available upon request. Dimension shown refect NAVSEA DWG 802-5959353, App. B

SUNFLEX
METALLOY PVT. LTD.
AN ISO 9001:2015 CERTIFIED CO.

SUNFLEX
METALLOY PVT. LTD.
AN ISO 9001:2015 CERTIFIED CO.

STREET SHORT RADIUS 90° ELBOW

PLAIN X BELLED END

Specifcation: DWG 802-5959353 / MSS-SP-119

Pressure Rating: 200 PSIG (WOG)

Intended for use with Class 200 Copper Nickel Tube IAW MIL-T-16420

SERVICE RATING TABLE		
Nominal Pipe Size (INCHES)	Maximum Working Pressure (LB/IN^2)	Maximum Temperature (°F)
1/4 through 12	200	150

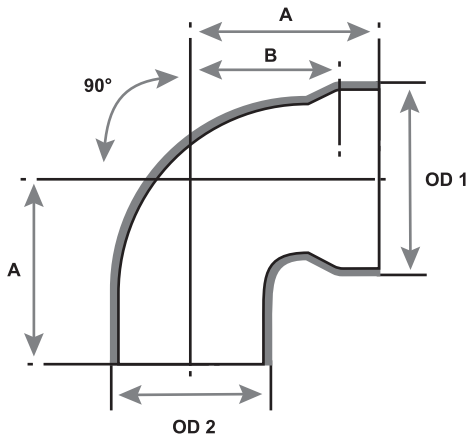



90/10 CUNI
(ALLOY C70600)



70/30 CUNI
(ALLOY C71500)

AVAILABLE ALLOYS: CUNI 90/10 & CUNI 70/30

NOMINAL PIPE SIZE	SMI P/N (90/10)	SMI P/N (70/30)	OD 1 (FEMALE)	OD 2 (MALE)	A	B
1"	ST9S9BE200	ST9S7BE200	1.445	1.315	1.810	1.430
1 1/4"	ST9S9BE250	ST9S7BE250	1.804	1.660	2.000	1.560
1 1/2"	ST9S9BE300	ST9S7BE300	2.044	1.900	2.620	2.060
2"	ST9S9BE400	ST9S7BE400	2.541	2.375	3.120	2.560
2 1/2"	ST9S9BE450	ST9S7BE450	3.041	2.875	4.000	3.250
3"	ST9S9BE500	ST9S7BE500	3.690	3.500	4.500	3.750
3 1/2"	ST9S9BE550	ST9S7BE550	4.190	4.000	5.060	4.310
4"	ST9S9BE600	ST9S7BE600	4.718	4.500	5.620	4.800
5"	ST9S9BE700	ST9S7BE700	5.813	5.563	6.75	5.81
6"	ST9S9BE800	ST9S7BE800	6.893	6.625	7.81	6.81
8"	ST9S9BE900	ST9S7BE900	8.927	8.625	10.19	8.94
10"	ST9S9BE1000	ST9S7BE1000	11.124	10.750	12.5	11.06
12"	ST9S9BE1100	ST9S7BE1100	13.250	12.750	14.62	13.06

NOTES: Fittings may be ordered with reduced ends. Sizes not shown may be available upon request. Dimension shown refect NAVSEA DWG 802-5959353, App. B

SUNFLEX
METALLOY PVT. LTD.
AN ISO 9001:2015 CERTIFIED CO.

SUNFLEX
METALLOY PVT. LTD.
AN ISO 9001:2015 CERTIFIED CO.

TEE
BELLED END

Specifcation: DWG 802-5959353 / MSS-SP-119
Pressure Rating: 200 PSIG (WOG)

Intended for use with Class 200 Copper Nickel Tube IAW MIL-T-16420

SERVICE RATING TABLE		
Nominal Pipe Size (INCHES)	Maximum Working Pressure (LB/IN^2)	Maximum Temperature (°F)
1/4 through 12	200	150

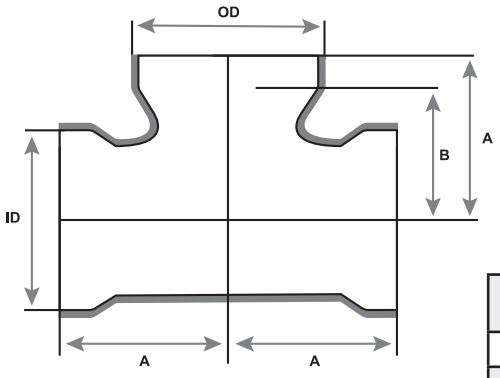



90/10 CUNI
(ALLOY C70600)



70/30 CUNI
(ALLOY C71500)

AVAILABLE ALLOYS: CUNI 90/10 & CUNI 70/30

NOMINAL PIPE SIZE	SMI P/N (90/10)	P/N (70/30)	ID	OD MIN	A	B
1/4"	T9BE040	T7BE040	0.540	0.670	0.69	0.38
3/8"	T9BE060	T7BE060	0.675	0.805	0.91	0.59
1/2"	T9BE100	T7BE100	0.840	0.970	1.09	0.78
3/4"	T9BE150	T7BE150	1.050	1.180	1.25	0.94
1"	T9BE200	T7BE200	1.315	1.445	1.5	1.12
1 1/4"	T9BE250	T7BE250	1.660	1.804	1.88	1.44
1 1/2"	T9BE300	T7BE300	1.900	2.044	2.25	1.69
2"	T9BE400	T7BE400	2.375	2.541	2.50	1.94
2 1/2"	T9BE450	T7BE450	2.875	3.041	3.00	2.25
3"	T9BE500	T7BE500	3.500	3.690	3.38	2.62
3 1/2"	T9BE550	T7BE550	4.000	4.190	3.75	2.94
4"	T9BE600	T7BE600	4.500	4.718	4.12	3.31
5"	T9BE700	T7BE700	5.563	5.813	4.88	3.94
6"	T9BE800	T7BE800	6.625	6.893	5.62	4.62
8"	T9BE900	T7BE900	8.625	8.927	7.00	5.75
10"	T9BE1000	T7BE1000	10.750	11.124	8.50	7.06
12"	T9BE1100	T7BE1100	12.75	13.250	10.00	8.43

NOTES: Fittings may be ordered with reduced ends. Sizes not shown may be available upon request. Dimension shown refect NAVSEA DWG 802-5959353, App. B

SUNFLEX
METALLOY PVT. LTD.
AN ISO 9001:2015 CERTIFIED CO.

SUNFLEX
METALLOY PVT. LTD.
AN ISO 9001:2015 CERTIFIED CO.

45° ELBOW
SILVER BRAZE

Specifcation: MIL-F-1183
Pressure Rating: 400 PSIG (WOG)

Intended for use with Class 200 or 700
Copper Nickel Tube IAW MIL-T-16420
Copper Tube IAW MIL-T-24107
Brass Tube IAW MIL-T-20168

SERVICE RATING TABLE				
Nominal Pipe Size (INCHES)	Maximum Working Pressure (LB/IN²)	Maximum Temperature (°F)	Maximum Working Pressure (LB/IN²)	Maximum Temperature (°F)
1/4 through 6 Above 6	200 150	425 425	400 250	150 150

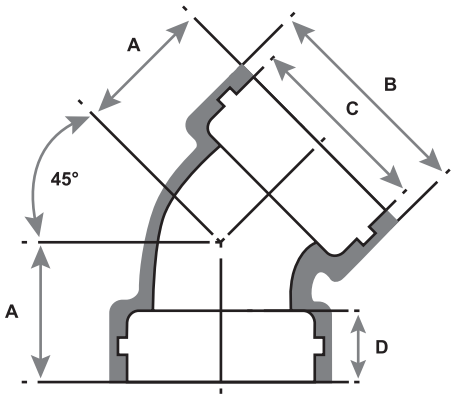



BRONZE
ASTM B61 / QQ-C-390 / MIL-B-16541
(ALLOY C90300 / C92200)

AVAILABLE ALLOY: BRONZE

NOMINAL PIPE SIZE	1/4"	3/8"	1/2"	3/4"	1"	1 1/4"	1 1/2"	2"	2 1/2"	3"	3 1/2"	4"
SMI P/N	4BSB040	4BSB060	4BSB100	4BSB150	4BSB200	4BSB250	4BSB300	4BSB400	4BSB450	4BSB500	4BSB550	4BSB600
A	0.56	0.63	0.78	0.89	1.06	1.22	1.30	1.45	1.95	2.17	2.39	2.61
B	0.700	0.855	1.020	1.250	1.535	1.900	2.160	2.675	3.215	3.880	4.400	4.940
C	0.540 MIN - 0.543 MAX	0.675 MIN - 0.678 MAX	0.840 MIN - 0.843 MAX	1.050 MIN - 1.053 MAX	1.315 MIN - 1.318 MAX	1.660 MIN - 1.663 MAX	1.900 MIN - 1.905 MAX	2.375 MIN - 2.380 MAX	2.875 MIN - 2.882 MAX	3.500 MIN - 3.507 MAX	4.00 MIN - 4.007 MAX	4.500 MIN - 4.507 MAX
D	17/64	5/16	3/8	13/32	7/16	1/2	5/8	21/32	25/32	53/64	7/8	29/32

NOTES: Brazing rings IAW QQ-B-654, BCuP-5 are to be used with grooved fitting ends.
Fittings may be ordered with reduced ends.

SUNFLEX
METALLOY PVT. LTD.
AN ISO 9001:2015 CERTIFIED CO.

SUNFLEX
METALLOY PVT. LTD.
AN ISO 9001:2015 CERTIFIED CO.

FEMALE PIPE THREAD ADAPTER

SILVER BRAZE

Specifcation: MIL-F-1183
Pressure Rating: 400 PSIG (WOG)

Intended for use with Class 200 or 700
Copper Nickel Tube IAW MIL-T-16420
Copper Tube IAW MIL-T-24107
Brass Tube IAW MIL-T-20168

SERVICE RATING TABLE				
Nominal Pipe Size (INCHES)	Maximum Working Pressure (LB/IN^2)	Maximum Temperature (°F)	Maximum Working Pressure (LB/IN^2)	Maximum Temperature (°F)
1/4 through 6	200	425	400	150
Above 6	150	425	250	150

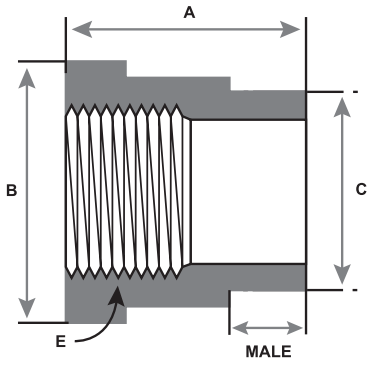

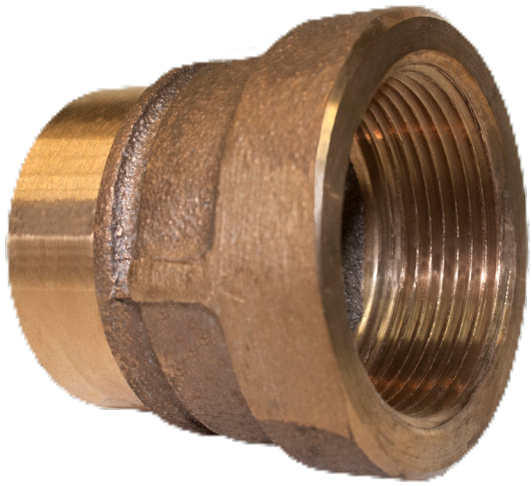

BRONZE
ASTM B61 / QQ-C-390 / MIL-B-16541
(ALLOY C90300 / C92200)

AVAILABLE ALLOY: BRONZE

NOMINAL PIPE SIZE	1/4"	3/8"	1/2"	3/4"	1"	1 1/4"	1 1/2"	2"	2 1/2"	3"	4"
SMI P/N	ABMSB040	ABMSB060	ABMSB100	ABMSB150	ABMSB200	ABMSB250	ABMSB300	ABMSB400	ABMSB450	ABMSB500	ABMSB600
A	1.00	1.38	1.53	1.41	1.56	2.13	2.19	2.38	2.53	2.63	4.38
B	0.76	0.94	1.06	1.16	1.22	1.44	1.63	1.75	1.94	2.13	2.25
C	0.540 MIN - 0.543 MAX	0.675 MIN - 0.678 MAX	0.840 MIN - 0.843 MAX	1.050 MIN - 1.053 MAX	1.315 MIN - 1.318 MAX	1.660 MIN - 1.663 MAX	1.900 MIN - 1.905 MAX	2.375 MIN - 2.380 MAX	2.875 MIN - 2.882 MAX	3.500 MIN - 3.507 MAX	4.500 MIN - 4.507 MAX
E	1/4 X 18	3/8 X 18	1/2 X 14	3/4 X 14	1 X 11.5	1-1/4 X 11.5	1-1/2 X 11.5	2 X 11.5	2 1/2 X 8	3 X 8	4 X 8

NOTES: Brazing rings IAW QQ-B-654, BCuP-5 are to be used with grooved ftting ends.
Fittings may be ordered with reduced ends.

SUNFLEX
METALLOY PVT. LTD.
AN ISO 9001:2015 CERTIFIED CO.

SUNFLEX
METALLOY PVT. LTD.
AN ISO 9001:2015 CERTIFIED CO.

MALE PIPE THREAD ADAPTER

SILVER BRAZE

Specifcation: MIL-F-1183
Pressure Rating: 400 PSIG (WOG)

Intended for use with Class 200 or 700
Copper Nickel Tube IAW MIL-T-16420
Copper Tube IAW MIL-T-24107
Brass Tube IAW MIL-T-20168

SERVICE RATING TABLE				
Nominal Pipe Size (INCHES)	Maximum Working Pressure (LB/IN²)	Maximum Temperature (°F)	Maximum Working Pressure (LB/IN²)	Maximum Temperature (°F)
1/4 through 6 Above 6	200 150	425 425	400 250	150 150

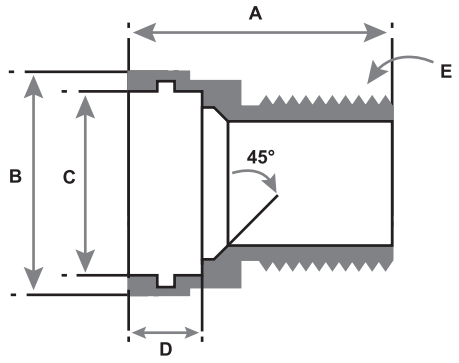



BRONZE
ASTM B61 / QQ-C-390 / MIL-B-16541
(ALLOY C90300 / C92200)

AVAILABLE ALLOY: BRONZE

NOMINAL PIPE SIZE	1/4"	3/8"	1/2"	3/4"	1"	1 1/4"	1 1/2"	2"	2 1/2"	3"	4"
SMI P/N	ABMPT040	ABMPT060	ABMPT100	ABMPT150	ABMPT200	ABMPT250	ABMPT300	ABMPT400	ABMPT450	ABMPT500	ABMPT600
A	1.063	1.125	1.438	1.500	1.750	1.875	2.063	2.125	3.188	3.344	3.688
B	0.700	0.855	1.020	1.250	1.535	1.900	2.160	2.675	3.215	3.880	4.940
C	0.540 MIN - 0.543 MAX	0.675 MIN - 0.678 MAX	0.840 MIN - 0.843 MAX	1.050 MIN - 1.053 MAX	1.315 MIN - 1.318 MAX	1.660 MIN - 1.663 MAX	1.900 MIN - 1.905 MAX	2.375 MIN - 2.380 MAX	2.875 MIN - 2.882 MAX	3.500 MIN - 3.507 MAX	4.500 MIN - 4.507 MAX
D	17/64	5/16	3/8	13/32	7/16	1/2	5/8	21/32	25/32	53/64	29/32
E	1/4 X 18	3/8 X 18	1/2 X 14	3/4 X 14	1 X 11.5	1-1/4 X 11.5	1-1/2 X 11.5	2 X 11.5	2 1/2 X 8	3 X 8	4 X 8

NOTES: Brazing rings IAW QQ-B-654, BCuP-5 are to be used with grooved ftting ends.
Fittings may be ordered with reduced ends.

SUNFLEX
METALLOY PVT. LTD.
AN ISO 9001:2015 CERTIFIED CO.

SUNFLEX
METALLOY PVT. LTD.
AN ISO 9001:2015 CERTIFIED CO.

BUSHING (INSERT REDUCER)

SILVER BRAZE

Specifcation: MIL-F-1183
Pressure Rating: 400 PSIG (WOG)

Intended for use with Class 200 or 700
Copper Nickel Tube IAW MIL-T-16420
Copper Tube IAW MIL-T-24107
Brass Tube IAW MIL-T-20168

SERVICE RATING TABLE				
Nominal Pipe Size (INCHES)	Maximum Working Pressure (LB/IN²)	Maximum Temperature (°F)	Maximum Working Pressure (LB/IN²)	Maximum Temperature (°F)
1/4 through 6	200	425	400	150
Above 6	150	425	250	150





BRONZE
ASTM B61 / QQ-C-390 / MIL-B-16541
(ALLOY C90300 / C92200)

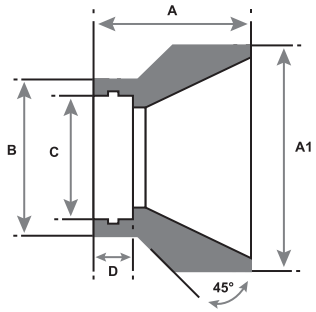

AVAILABLE ALLOY: BRONZE

NOMINAL PIPE SIZE	SMI P/N	A	A1	B	C	D
3/8 x 1/4	BBSB060-040	1 5/16	0.672 MIN. - 0.675 MAX.	0.855	0.675 MIN. - 0.678 MAX.	5/16
1/2 x 1/4	BBSB100-040	1 1/16	0.837 MIN. - 0.840 MAX.	1.020	0.840 MIN. - 0.843 MAX.	3/8
1/2 x 3/8	BBSB100-060	1 1/16	0.837 MIN. - 0.840 MAX.	1.020	0.840 MIN. - 0.843 MAX.	3/8
3/4 x 1/4	BBSB150-040	1 3/16	1.047 MIN. - 1.050 MAX.	1.250	1.050 MIN. - 1.053 MAX.	13/32
3/4 x 3/8	BBSB150-060	1 3/16	1.047 MIN. - 1.050 MAX.	1.250	1.050 MIN. - 1.053 MAX.	13/32
3/4 x 1/2	BBSB150-100	1 3/16	1.047 MIN. - 1.050 MAX.	1.250	1.050 MIN. - 1.053 MAX.	13/32
1 x 1/4	BBSB200-040	1 1/4	1.312 MIN. - 1.315 MAX.	1.535	1.315 MIN. - 1.318 MAX	7/16
1 x 3/8	BBSB200-060	1 1/4	1.312 MIN. - 1.315 MAX.	1.535	1.315 MIN. - 1.318 MAX	7/16
1 x 1/2	BBSB200-100	1 1/4	1.312 MIN. - 1.315 MAX.	1.535	1.315 MIN. - 1.318 MAX	7/16
1 x 3/4	BBSB200-150	1 1/4	1.312 MIN. - 1.315 MAX.	1.535	1.315 MIN. - 1.318 MAX	7/16
1 1/4 x 1/4	BBSB250-040	1 7/16	1.657 MIN. - 1.660 MAX.	1.900	1.660 MIN - 1.663 MAX.	1/2
1 1/4 x 3/8	BBSB250-060	1 7/16	1.657 MIN. - 1.660 MAX.	1.900	1.660 MIN - 1.663 MAX.	1/2
1 1/4 x 1/2	BBSB250-100	1 7/16	1.657 MIN. - 1.660 MAX.	1.900	1.660 MIN - 1.663 MAX.	1/2
1 1/4 x 3/4	BBSB250-150	1 7/16	1.657 MIN. - 1.660 MAX.	1.900	1.660 MIN - 1.663 MAX.	1/2
1 1/4 x 1	BBSB250-200	1 7/16	1.657 MIN. - 1.660 MAX.	1.900	1.660 MIN - 1.663 MAX.	1/2
1 1/2 x 1/4	BBSB300-040	1 5/8	1.897 MIN. - 1.900 MAX.	2.160	1.900 MIN. - 1.905 MAX.	5/8
1 1/2 x 3/8	BBSB300-060	1 5/8	1.897 MIN. - 1.900 MAX.	2.160	1.900 MIN. - 1.905 MAX.	5/8

NOTES: Brazing rings IAW QQ-B-654, BCuP-5 are to be used with grooved ftting ends.
Fittings may be ordered with reduced ends.

SUNFLEX
METALLOY PVT. LTD.
AN ISO 9001:2015 CERTIFIED CO.

BUSHING (INSERT REDUCER)

SILVER BRAZE

Specifcation: MIL-F-1183
Pressure Rating: 400 PSIG (WOG)

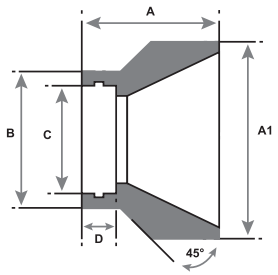



BRONZE
ASTM B61 / QQ-C-390 / MIL-B-16541
(ALLOY C90300 / C92200)



NOMINAL PIPE SIZE	SMI P/N	A	A1	B	C	D
1 1/2 x 1/2	BBSB300-100	1 5/8	1.897 MIN. - 1.900 MAX.	2.160	1.900 MIN. - 1.905 MAX.	5/8
1 1/2 x 3/4	BBSB300-150	1 5/8	1.897 MIN. - 1.900 MAX.	2.160	1.900 MIN. - 1.905 MAX.	5/8
1 1/2 x 1	BBSB300-200	1 5/8	1.897 MIN. - 1.900 MAX.	2.160	1.900 MIN. - 1.905 MAX.	5/8
1 1/2 x 1 1/4	BBSB300-250	1 5/8	1.897 MIN. - 1.900 MAX.	2.160	1.900 MIN. - 1.905 MAX.	5/8
2 x 1/4	BBSB400-040	1 7/8	2.372 MIN. - 2.375 MAX.	2.675	2.375 MIN. - 2.380 MAX	21/32
2 x 3/8	BBSB400-060	1 7/8	2.372 MIN. - 2.375 MAX.	2.675	2.375 MIN. - 2.380 MAX	21/32
2 x 1/2	BBSB400-100	1 7/8	2.372 MIN. - 2.375 MAX.	2.675	2.375 MIN. - 2.380 MAX	21/32
2 x 3/4	BBSB400-150	1 7/8	2.372 MIN. - 2.375 MAX.	2.675	2.375 MIN. - 2.380 MAX	21/32
2 x 1	BBSB400-200	1 7/8	2.372 MIN. - 2.375 MAX.	2.675	2.375 MIN. - 2.380 MAX	21/32
2 x 1 1/4	BBSB400-250	1 7/8	2.372 MIN. - 2.375 MAX.	2.675	2.375 MIN. - 2.380 MAX	21/32
2 x 1 1/2	BBSB400-300	1 7/8	2.372 MIN. - 2.375 MAX.	2.675	2.375 MIN. - 2.380 MAX	21/32
2 1/2 x 1/2	BBSB450-100	2 1/8	2.872 MIN. - 2.875 MAX.	3.215	2.875 MIN. - 2.882 MAX.	25/32
2 1/2 x 3/4	BBSB450-150	2 1/8	2.872 MIN. - 2.875 MAX.	3.215	2.875 MIN. - 2.882 MAX.	25/32
2 1/2 x 1	BBSB450-200	2 1/8	2.872 MIN. - 2.875 MAX.	3.215	2.875 MIN. - 2.882 MAX.	25/32
2 1/2 x 1 1/4	BBSB450-250	2 1/8	2.872 MIN. - 2.875 MAX.	3.215	2.875 MIN. - 2.882 MAX.	25/32
2 1/2 x 1 1/2	BBSB450-300	2 1/8	2.872 MIN. - 2.875 MAX.	3.215	2.875 MIN. - 2.882 MAX.	25/32
2 1/2 x 2	BBSB450-400	2 1/8	2.872 MIN. - 2.875 MAX.	3.215	2.875 MIN. - 2.882 MAX.	25/32
3 x 1/2	BBSB500-100	2 1/2	3.497 MIN. - 3.500 MAX.	3.880	3.500 MIN. - 3.507 MAX.	53/64
3 x 3/4	BBSB500-150	2 1/2	3.497 MIN. - 3.500 MAX.	3.880	3.500 MIN. - 3.507 MAX.	53/64
3 x 1	BBSB500-200	2 1/2	3.497 MIN. - 3.500 MAX.	3.880	3.500 MIN. - 3.507 MAX.	53/64
3 x 1 1/4	BBSB500-250	2 1/2	3.497 MIN. - 3.500 MAX.	3.880	3.500 MIN. - 3.507 MAX.	53/64
3 x 1 1/2	BBSB500-300	2 1/2	3.497 MIN. - 3.500 MAX.	3.880	3.500 MIN. - 3.507 MAX.	53/64
3 x 2	BBSB500-400	2 1/2	3.497 MIN. - 3.500 MAX.	3.880	3.500 MIN. - 3.507 MAX.	53/64
3 x 2 1/2	BBSB500-450	2 1/2	3.497 MIN. - 3.500 MAX.	3.880	3.500 MIN. - 3.507 MAX.	53/64
3 1/2 x 1	BBSB550-200	2 5/8	3.997 MIN. - 4.000 MAX.	4.400	4.000 MIN - 4.007 MAX	7/8
3 1/2 x 1 1/4	BBSB550-250	2 5/8	3.997 MIN. - 4.000 MAX.	4.400	4.000 MIN - 4.007 MAX	7/8
3 1/2 x 1 1/2	BBSB550-300	2 5/8	3.997 MIN. - 4.000 MAX.	4.400	4.000 MIN - 4.007 MAX	7/8
3 1/2 x 2	BBSB550-400	2 5/8	3.997 MIN. - 4.000 MAX.	4.400	4.000 MIN - 4.007 MAX	7/8
3 1/2 x 2 1/2	BBSB550-450	2 5/8	3.997 MIN. - 4.000 MAX.	4.400	4.000 MIN - 4.007 MAX	7/8
3 1/2 x 3	BBSB550-500	2 5/8	3.997 MIN. - 4.000 MAX.	4.400	4.000 MIN - 4.007 MAX	7/8
4 x 3/4	BBSB600-150	3 1/8	4.497 MIN. - 4.500 MAX.	4.940	4.500 MIN. - 4.507 MAX.	29/32
4 x 1	BBSB600-200	3 1/8	4.497 MIN. - 4.500 MAX.	4.940	4.500 MIN. - 4.507 MAX.	29/32
4 x 1 1/4	BBSB600-250	3 1/8	4.497 MIN. - 4.500 MAX.	4.940	4.500 MIN. - 4.507 MAX.	29/32
4 x 1 1/2	BBSB600-300	3 1/8	4.497 MIN. - 4.500 MAX.	4.940	4.500 MIN. - 4.507 MAX.	29/32
4 x 2	BBSB600-400	3 1/8	4.497 MIN. - 4.500 MAX.	4.940	4.500 MIN. - 4.507 MAX.	29/32
4 x 2 1/2	BBSB600-450	3 1/8	4.497 MIN. - 4.500 MAX.	4.940	4.500 MIN. - 4.507 MAX.	29/32
4 x 3	BBSB600-500	3 1/8	4.497 MIN. - 4.500 MAX.	4.940	4.500 MIN. - 4.507 MAX.	29/32
4 x 3 1/2	BBSB600-550	3 1/8	4.497 MIN. - 4.500 MAX.	4.940	4.500 MIN. - 4.507 MAX.	29/32

NOTES: Brazing rings IAW QQ-B-654, BCuP-5 are to be used with grooved ftting ends.
Fittings may be ordered with reduced ends.

SUNFLEX
METALLOY PVT. LTD.
AN ISO 9001:2015 CERTIFIED CO.

CAP

SILVER BRAZE

Intended for use with Class 200 or 700
Copper Nickel Tube IAW MIL-T-16420
Copper Tube IAW MIL-T-24107
Brass Tube IAW MIL-T-20168

Specifcation: MIL-F-1183
Pressure Rating: 400 PSIG (WOG)

SERVICE RATING TABLE				
Nominal Pipe Size (INCHES)	Maximum Working Pressure (LB/IN²)	Maximum Temperature (°F)	Maximum Working Pressure (LB/IN²)	Maximum Temperature (°F)
1/4 through 6	200	425	400	150
Above 6	150	425	250	150

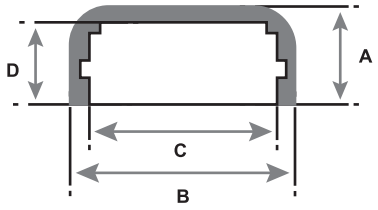





BRONZE
ASTM B61 / QQ-C-390 / MIL-B-16541
(ALLOY C90300 / C92200)

AVAILABLE ALLOY: BRONZE

NOMINAL PIPE SIZE	1/4"	3/8"	1/2"	3/4"	1"	1 1/4"	1 1/2"	2"	2 1/2"	3"	3 1/2"	4"
SMI P/N	CABSB040	CABSB060	CABSB100	CABSB150	CABSB200	CABSB250	CABSB300	CABSB400	CABSB450	CABSB500	CABSB550	CABSB600
A	0.59	0.64	0.76	0.84	0.99	1.10	1.15	1.32	1.70	1.80	1.90	2.08
B	0.81	1	1.17	1.42	1.72	2.1	2.28	2.92	3.49	4.2	4.75	5.31
C	0.58	0.72	0.90	1.11	1.39	1.73	1.97	2.45	2.98	3.60	4.10	4.60
D	0.49	0.53	0.64	0.71	0.84	0.93	0.96	1.10	1.45	1.51	1.58	1.71

NOTES: Brazing rings IAW QQ-B-654, BCuP-5 are to be used with grooved ftting ends.
Fittings may be ordered with reduced ends.

SUNFLEX
METALLOY PVT. LTD.
AN ISO 9001:2015 CERTIFIED CO.

COUPLING
SILVER BRAZE

Specifcation: MIL-F-1183
Pressure Rating: 400 PSIG (WOG)

Intended for use with Class 200 or 700
Copper Nickel Tube IAW MIL-T-16420
Copper Tube IAW MIL-T-24107
Brass Tube IAW MIL-T-20168

SERVICE RATING TABLE				
Nominal Pipe Size (INCHES)	Maximum Working Pressure (LB/IN^2)	Maximum Temperature (°F)	Maximum Working Pressure (LB/IN^2)	Maximum Temperature (°F)
1/4 through 6 Above 6	200 150	425 425	400 250	150 150

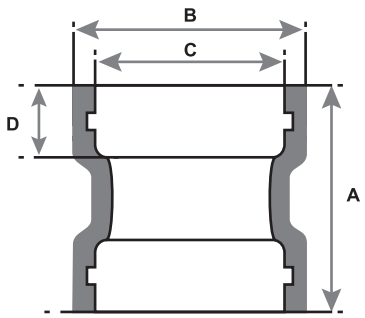



BRONZE
ASTM B61 / QQ-C-390 / MIL-B-16541
(ALLOY C90300 / C92200)

AVAILABLE ALLOY: BRONZE

NOMINAL PIPE SIZE	1/4"	3/8"	1/2"	3/4"	1"	1 1/4"	1 1/2"	2"	2 1/2"	3"	3 1/2"	4"
SMI P/N	COBSB040	COBSB060	COBSB100	COBSB150	COBSB200	COBSB250	COBSB300	COBSB400	COBSB450	COBSB500	COBSB550	COBSB600
A	0.97	1.05	1.29	1.43	1.68	1.86	1.92	2.20	2.88	3.18	3.43	3.69
B	0.700	0.855	1.020	1.250	1.535	1.900	2.160	2.675	3.215	3.880	4.400	4.940
C	0.540 MIN - 0.543 MAX	0.675 MIN - 0.678 MAX	0.840 MIN - 0.843 MAX	1.050 MIN - 1.053 MAX	1.315 MIN - 1.318 MAX	1.660 MIN - 1.663 MAX	1.900 MIN - 1.905 MAX	2.375 MIN - 2.380 MAX	2.875 MIN - 2.882 MAX	3.500 MIN - 3.507 MAX	4.00 MIN - 4.007 MAX	4.500 MIN - 4.507 MAX
D	17/64	5/16	3/8	13/32	7/16	1/2	5/8	21/32	25/32	53/64	7/8	29/32

NOTES: Brazing rings IAW QQ-B-654, BCuP-5 are to be used with grooved ftting ends.
Fittings may be ordered with reduced ends.

SUNFLEX
METALLOY PVT. LTD.
AN ISO 9001:2015 CERTIFIED CO.

SUNFLEX
METALLOY PVT. LTD.
AN ISO 9001:2015 CERTIFIED CO.

CROSS

SILVER BRAZE

Specifcation: MIL-F-1183

Pressure Rating: 400 PSIG (WOG)

Intended for use with Class 200 or 700
Copper Nickel Tube IAW MIL-T-16420
Copper Tube IAW MIL-T-24107
Brass Tube IAW MIL-T-20168

SERVICE RATING TABLE				
Nominal Pipe Size (INCHES)	Maximum Working Pressure (LB/IN²)	Maximum Temperature (°F)	Maximum Working Pressure (LB/IN²)	Maximum Temperature (°F)
1/4 through 6 Above 6	200 150	425 425	400 250	150 150

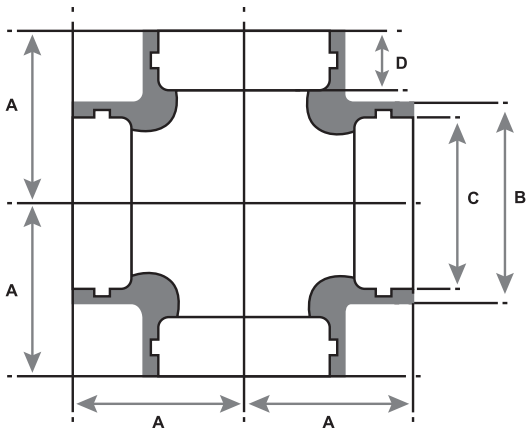



BRONZE
ASTM B61 / QQ-C-390 / MIL-B-16541
(ALLOY C90300 / C92200)

AVAILABLE ALLOY: BRONZE

NOMINAL PIPE SIZE	1/4"	3/8"	1/2"	3/4"	1"	1 1/4"	1 1/2"	2"	2 1/2"	3"	3 1/2"	4"
SMI P/N	CRBSB040	CRBSB060	CRBSB100	CRBSB150	CRBSB200	CRBSB250	CRBSB300	CRBSB400	CRBSB450	CRBSB500	CRBSB550	CRBSB600
A	0.72	0.81	1.00	1.19	1.06	1.69	1.84	2.13	2.69	3.09	3.44	3.78
B	0.700	0.855	1.020	1.250	1.535	1.900	2.160	2.675	3.215	3.880	4.400	4.940
C	0.540 MIN - 0.543 MAX	0.675 MIN - 0.678 MAX	0.840 MIN - 0.843 MAX	1.050 MIN - 1.053 MAX	1.315 MIN - 1.318 MAX	1.660 MIN - 1.663 MAX	1.900 MIN - 1.905 MAX	2.375 MIN - 2.380 MAX	2.875 MIN - 2.882 MAX	3.500 MIN - 3.507 MAX	4.00 MIN - 4.007 MAX	4.500 MIN - 4.507 MAX
D	17/64	5/16	3/8	13/32	7/16	1/2	5/8	21/32	25/32	53/64	7/8	29/32

NOTES: Brazing rings IAW QQ-B-654, BCuP-5 are to be used with grooved ftting ends.
Fittings may be ordered with reduced ends.

SUNFLEX
METALLOY PVT. LTD.
AN ISO 9001:2015 CERTIFIED CO.

SUNFLEX
METALLOY PVT. LTD.
AN ISO 9001:2015 CERTIFIED CO.

LONG TURN DOUBLE SWEEP TEE

SILVER BRAZE

Specifcation: MIL-F-1183
Pressure Rating: 400 PSIG (WOG)

Intended for use with Class 200 or 700
Copper Nickel Tube IAW MIL-T-16420
Copper Tube IAW MIL-T-24107
Brass Tube IAW MIL-T-20168

SERVICE RATING TABLE				
Nominal Pipe Size (INCHES)	Maximum Working Pressure (LB/IN^2)	Maximum Temperature (°F)	Maximum Working Pressure (LB/IN^2)	Maximum Temperature (°F)
1/4 through 6 Above 6	200 150	425 425	400 250	150 150

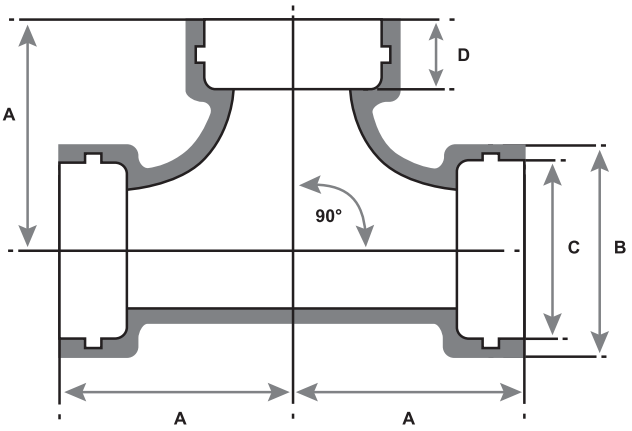



BRONZE
ASTM B61 / QQ-C-390 / MIL-B-16541
(ALLOY C90300 / C92200)

AVAILABLE ALLOY: BRONZE

NOMINAL PIPE SIZE	1/4"	3/8"	1/2"	3/4"	1"	1 1/4"	1 1/2"	2"	2 1/2"	3"	3 1/2"	4"
SMI P/N	DSTBSB040	DSTBSB660	DSTBSB100	DSTBSB150	DSTBSB200	DSTBSB250	DSTBSB300	DSTBSB400	DSTBSB450	DSTBSB500	DSTBSB550	DSTBSB600
A	1.50	1.75	2.00	2.31	2.75	3.13	3.75	4.50	5.44	6.19	6.94	8.13
B	0.700	0.855	1.020	1.250	1.535	1.900	2.160	2.675	3.215	3.880	4.400	4.940
C	0.540 MIN - 0.543 MAX	0.675 MIN - 0.678 MAX	0.840 MIN - 0.843 MAX	1.050 MIN - 1.053 MAX	1.315 MIN - 1.318 MAX	1.660 MIN - 1.663 MAX	1.900 MIN - 1.905 MAX	2.375 MIN - 2.380 MAX	2.875 MIN - 2.882 MAX	3.500 MIN - 3.507 MAX	4.00 MIN - 4.007 MAX	4.500 MIN - 4.507 MAX
D	17/64	5/16	3/8	13/32	7/16	1/2	5/8	21/32	25/32	53/64	7/8	29/32

NOTES: Brazing rings IAW QQ-B-654, BCuP-5 are to be used with grooved fitting ends.
Fittings may be ordered with reduced ends.

SUNFLEX
METALLOY PVT. LTD.
AN ISO 9001:2015 CERTIFIED CO.

SUNFLEX
METALLOY PVT. LTD.
AN ISO 9001:2015 CERTIFIED CO.

FSB X FPT COUPLING

SILVER BRAZE

Specifcation: MIL-F-1183
Pressure Rating: 400 PSIG (WOG)

Intended for use with Class 200 or 700
Copper Nickel Tube IAW MIL-T-16420
Copper Tube IAW MIL-T-24107
Brass Tube IAW MIL-T-20168

SERVICE RATING TABLE				
Nominal Pipe Size (INCHES)	Maximum Working Pressure (LB/IN^2)	Maximum Temperature (°F)	Maximum Working Pressure (LB/IN^2)	Maximum Temperature (°F)
1/4 through 6 Above 6	200 150	425 425	400 250	150 150



BRONZE
ASTM B61 / QQ-C-390 / MIL-B-16541
(ALLOY C90300 / C92200)



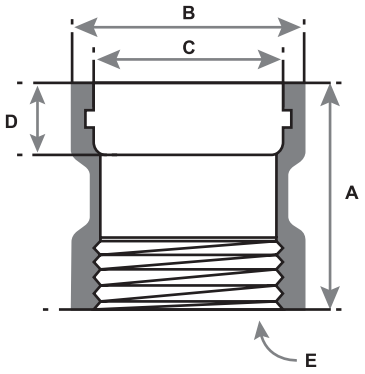

AVAILABLE ALLOY: BRONZE

NOMINAL PIPE SIZE	1/4"	3/8"	1/2"	3/4"	1"	1 1/4"	1 1/2"	2"	2 1/2"	3"	4"
SMI P/N	ABFPT040	ABFPT060	ABFPT100	ABFPT150	ABFPT200	ABFPT250	ABFPT300	ABFPT400	ABFPT450	ABFPT500	ABFPT600
A	1.06	1.13	1.44	1.50	1.75	1.88	2.06	2.13	3.19	3.34	3.69
B	0.700	0.855	1.020	1.250	1.535	1.900	2.160	2.675	3.215	3.880	4.940
C	0.540 MIN - 0.543 MAX	0.675 MIN - 0.678 MAX	0.840 MIN - 0.843 MAX	1.050 MIN - 1.053 MAX	1.315 MIN - 1.318 MAX	1.660 MIN - 1.663 MAX	1.900 MIN - 1.905 MAX	2.375 MIN - 2.380 MAX	2.875 MIN - 2.882 MAX	3.500 MIN - 3.507 MAX	4.500 MIN - 4.507 MAX
D	17/64	5/16	3/8	13/32	7/16	1/2	5/8	21/32	25/32	53/64	29/32
E	1/4 X 18	3/8 X 18	1/2 X 14	3/4 X 14	1 X 11.5	1-1/4 X 11.5	1-1/2 X 11.5	2 X 11.5	2 1/2 X 8	3 X 8	4 X 8

NOTES: Brazing rings IAW QQ-B-654, BCuP-5 are to be used with grooved ftting ends.
Fittings may be ordered with reduced ends.

SUNFLEX
METALLOY PVT. LTD.
AN ISO 9001:2015 CERTIFIED CO.

SUNFLEX
METALLOY PVT. LTD.
AN ISO 9001:2015 CERTIFIED CO.

LATERAL
SILVER BRAZE

Specifcation: MIL-F-1183
Pressure Rating: 400 PSIG (WOG)

Intended for use with Class 200 or 700
Copper Nickel Tube IAW MIL-T-16420
Copper Tube IAW MIL-T-24107
Brass Tube IAW MIL-T-20168

SERVICE RATING TABLE				
Nominal Pipe Size (INCHES)	Maximum Working Pressure (LB/IN²)	Maximum Temperature (°F)	Maximum Working Pressure (LB/IN²)	Maximum Temperature (°F)
1/4 through 6 Above 6	200 150	425 425	400 250	150 150

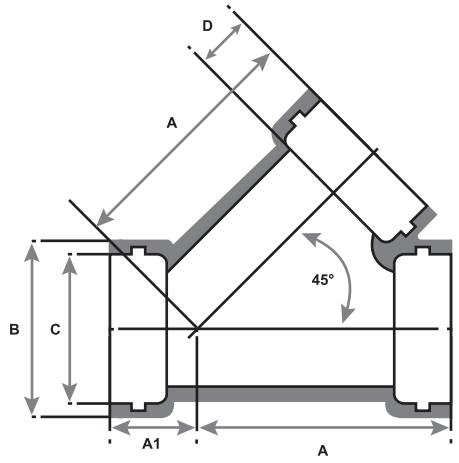



BRONZE
ASTM B61 / QQ-C-390 / MIL-B-16541
(ALLOY C90300 / C92200)

AVAILABLE ALLOY: BRONZE

NOMINAL PIPE SIZE	1/4"	3/8"	1/2"	3/4"	1"	1 1/4"	1 1/2"	2"	2 1/2"	3"	3 1/2"	4"
SMI P/N	LBSB040	LBSB060	LBSB100	LBSB150	LBSB200	LBSB250	LBSB300	LBSB400	LBSB450	LBSB500	LBSB550	LBSB600
A	0.43	0.50	0.61	0.72	0.85	1.02	1.10	1.24	1.52	1.71	1.85	2.01
A1	1.07	1.28	1.58	1.90	2.30	2.83	3.14	3.76	4.73	5.55	6.25	6.97
B	0.700	0.855	1.020	1.250	1.535	1.900	2.160	2.675	3.215	3.880	4.400	4.940
C	0.540 MIN - 0.543 MAX	0.675 MIN - 0.678 MAX	0.840 MIN - 0.843 MAX	1.050 MIN - 1.053 MAX	1.315 MIN - 1.318 MAX	1.660 MIN - 1.663 MAX	1.900 MIN - 1.905 MAX	2.375 MIN - 2.380 MAX	2.875 MIN - 2.882 MAX	3.500 MIN - 3.507 MAX	4.00 MIN - 4.007 MAX	4.500 MIN - 4.507 MAX
D	17/64	5/16	3/8	13/32	7/16	1/2	5/8	21/32	25/32	53/64	7/8	29/32

NOTES: Brazing rings IAW QQ-B-654, BCuP-5 are to be used with grooved ftting ends.
Fittings may be ordered with reduced ends.

SUNFLEX
METALLOY PVT. LTD.
AN ISO 9001:2015 CERTIFIED CO.

SUNFLEX
METALLOY PVT. LTD.
AN ISO 9001:2015 CERTIFIED CO.

90° ELBOW LONG RADIUS

SILVER BRAZE

Specifcation: MIL-F-1183

Pressure Rating: 400 PSIG (WOG)

Intended for use with Class 200 or 700
Copper Nickel Tube IAW MIL-T-16420
Copper Tube IAW MIL-T-24107
Brass Tube IAW MIL-T-20168

SERVICE RATING TABLE

Nominal Pipe Size (INCHES)	Maximum Working Pressure (LB/IN²)	Maximum Temperature (°F)	Maximum Working Pressure (LB/IN²)	Maximum Temperature (°F)
1/4 through 6	200	425	400	150
Above 6	150	425	250	150

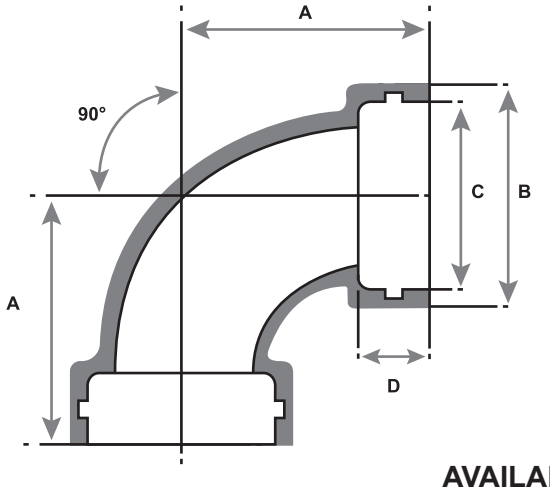



BRONZE
ASTM B61 / QQ-C-390 / MIL-B-16541
(ALLOY C90300 / C92200)

AVAILABLE ALLOY: BRONZE

NOMINAL PIPE SIZE	1/4"	3/8"	1/2"	3/4"	1"	1 1/4"	1 1/2"	2"	2 1/2"	3"	3 1/2"	4"
SMI P/N	9LBSB040	9LBSB060	9LBSB100	9LBSB150	9LBSB200	9LBSB250	9LBSB300	9LBSB400	9LBSB450	9LBSB500	9LBSB550	9LBSB600
A	1.25	1.50	1.75	2.00	2.31	2.75	3.13	3.75	4.50	5.44	6.19	6.94
B	0.700	0.855	1.020	1.250	1.535	1.900	2.160	2.675	3.215	3.880	4.400	4.940
C	0.540 MIN - 0.543 MAX	0.675 MIN - 0.678 MAX	0.840 MIN - 0.843 MAX	1.050 MIN - 1.053 MAX	1.315 MIN - 1.318 MAX	1.660 MIN - 1.663 MAX	1.900 MIN - 1.905 MAX	2.375 MIN - 2.380 MAX	2.875 MIN - 2.882 MAX	3.500 MIN - 3.507 MAX	4.00 MIN - 4.007 MAX	4.500 MIN - 4.507 MAX
D	17/64	5/16	3/8	13/32	7/16	1/2	5/8	21/32	25/32	53/64	7/8	29/32

NOTES: Brazing rings IAW QQ-B-654, BCuP-5 are to be used with grooved fitting ends.
Fittings may be ordered with reduced ends.

SUNFLEX
METALLOY PVT. LTD.
AN ISO 9001:2015 CERTIFIED CO.

SUNFLEX
METALLOY PVT. LTD.
AN ISO 9001:2015 CERTIFIED CO.

PLUG

SILVER BRAZE

Specifcation: MIL-F-1183
Pressure Rating: 400 PSIG (WOG)

Intended for use with Class 200 or 700
Copper Nickel Tube IAW MIL-T-16420
Copper Tube IAW MIL-T-24107
Brass Tube IAW MIL-T-20168

SERVICE RATING TABLE				
Nominal Pipe Size (INCHES)	Maximum Working Pressure (LB/IN²)	Maximum Temperature (°F)	Maximum Working Pressure (LB/IN²)	Maximum Temperature (°F)
1/4 through 6 Above 6	200 150	425 425	400 250	150 150

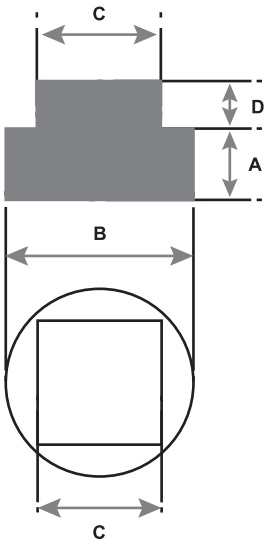



BRONZE
ASTM B61 / QQ-C-390 / MIL-B-16541
(ALLOY C90300 / C92200)

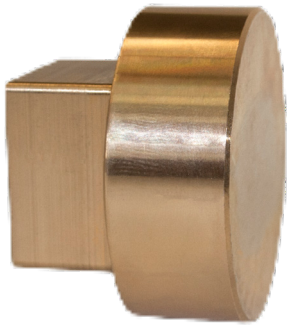

AVAILABLE ALLOY: BRONZE

NOMINAL PIPE SIZE	1/4"	3/8"	1/2"	3/4"	1"	1 1/4"	1 1/2"	2"	2 1/2"	3"	3 1/2"	4"
SMI P/N	PLBSB040	PLBSB060	PLBSB100	PLBSB150	PLBSB200	PLBSB250	PLBSB300	PLBSB400	PLBSB450	PLBSB500	PLBSB550	PLBSB600
A	.30 MIN - .41 MAX	.34 MIN - .41 MAX	.41 MIN - .54 MAX	.44 MIN - .55 MAX	.47 MIN - .59 MAX	.53 MIN. - .71 MAX	.66 MIN. - .73 MAX	.69 MIN - .76 MAX	.84 MIN - 1.07 MAX.	.89 MIN - 1.13 MAX	.94 MIN - 1.18 MAX	.97 MIN - 1.22 MAX
B	.537 MIN - .540 MAX	.672 MIN - .675 MAX	.837 MIN - .840 MAX	1.047 MIN - 1.050 MAX	1.312 MIN - 1.315 MAX	1.657 MIN - 1.660 MAX	1.897 MIN - 1.900 MAX	2.372 MIN - 2.375 MAX	2.872 MIN. - 2.875 MAX	3.497 MIN - 3.5 MAX	3.997 MIN - 4.0 MAX	4.497 MIN - 4.5 MAX
C	3/8	7/16	9/16	5/8	13/16	15/16	1 1/8	1 5/16	1 1/2	1 11/16	1 7/8	2 1/4
D	0.28	0.31	0.38	0.44	0.50	0.56	0.62	0.68	0.74	0.80	0.86	0.92

NOTES: Brazing rings IAW QQ-B-654, BCuP-5 are to be used with grooved ftting ends.
Fittings may be ordered with reduced ends.

SUNFLEX
METALLOY PVT. LTD.
AN ISO 9001:2015 CERTIFIED CO.

SUNFLEX
METALLOY PVT. LTD.
AN ISO 9001:2015 CERTIFIED CO.

RETAINING RING & O-RING



O-RING AND GASKET SERVICE RATING TABLE						
MAXIMUM TEMPERATURE (°F)						
FLUORO-CARBON (VITON)	MIL-R-83248 CLASS 1 MIL-R-83248/L	ETHYLENE PROPYLENE RUBBER (EPR)	PARKER SEAL COMPOUNDS	NITRILE	NIL-P-83461	MAXIMUM PRESSURE (PSIG)
		ETHYLENE PROPYLENE COPPER ALLOY	MIL-G-2474B TYPE B	NITRILE COPPER ALLOY	MIL-G-24748	
SEE NOTE 1		SEE NOTES 2 & 4		SEE NOTES 3 & 4		
WATER, AIR, FUEL OIL & HYDRAULIC FLUID (PETROLEUM & WATER GLYCOL BASE)		STEAM, WATER & HYDRAULIC FLUID (PHOSPHATE ESTER & WATER GLYCOL BASED)	AIR	STEAM, WATER, AIR, OIL & HYDRAULIC FLUID (PETROLEUM & WATER GLYCOL BASE)		
0 – 150		0 – 150	0 – 150	0 – 150		400
200		200	200	200		385
250		250	250	250		375
300		300	300	--		365
350		350	--	--		355
400		400	--	--		345



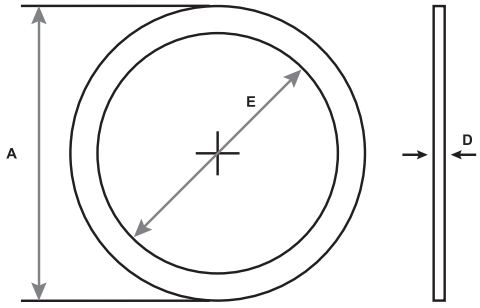

1. *For non-nuclear applications only unless specifcally approved by NA VSEA 08*
2. *Ethylene propylene rubber (EPR) O-Rings or metallic and rubber gaskets are intended for use in steam and water continuous service up to 400°F, in steam and water intermittent service up to 425°F and in air service up to 300°F. No oil or possibility of oil contamination can exist in steam, water or air.*
3. *Nitrile O-Rings or metallic and rubber gaskets are intended for use in steam, water, air and oil service. Steam, water, and air may be mixed with oil.*
4. *For MIL-G-24748 SEE METALLIC AND RUBBER GASKET TABLE*

RETAINING RING	NOMINAL PIPE SIZE	1/4"	3/8"	1/2"	3/4"	1"	1 1/4"	1 1/2"	2"
	SMI P/N	BSBRR040	BSBRR060	BSBRR100	BSBRR150	BSBRR200	BSBRR250	BSBRR300	BSBRR400
	A	1.008	1.184	1.394	1.715	2.045	2.471	2.791	3.391
	E	0.813	0.938	1.188	1.500	1.750	2.062	2..375	3.000
	D	0.050	0.050	0.050	0.060	0.070	0.070	0.070	0.090

O-RING	NOMINAL PIPE SIZE	1/4"	3/8"	1/2"	3/4"	1"	1 1/4"	1 1/2"	2"
	O-RING CONFIGURATION & SIZE	AS 568-017	AS 568-019	AS 568-023	AS 568-125	AS 568-129	AS 568-134	AS 568-139	AS 568-232

NOTES: Add O-Ring material to create P/N (VITON / EPR / NITRILE)

SUNFLEX
METALLOY PVT. LTD.
AN ISO 9001:2015 CERTIFIED CO.

SUNFLEX
METALLOY PVT. LTD.
AN ISO 9001:2015 CERTIFIED CO.

RETURN BEND
SILVER BRAZE

Specifcation: MIL-F-1183
Pressure Rating: 400 PSIG (WOG)

Intended for use with Class 200 or 700
Copper Nickel Tube IAW MIL-T-16420
Copper Tube IAW MIL-T-24107
Brass Tube IAW MIL-T-20168

SERVICE RATING TABLE				
Nominal Pipe Size (INCHES)	Maximum Working Pressure (LB/IN²)	Maximum Temperature (°F)	Maximum Working Pressure (LB/IN²)	Maximum Temperature (°F)
1/4 through 6 Above 6	200 150	425 425	400 250	150 150

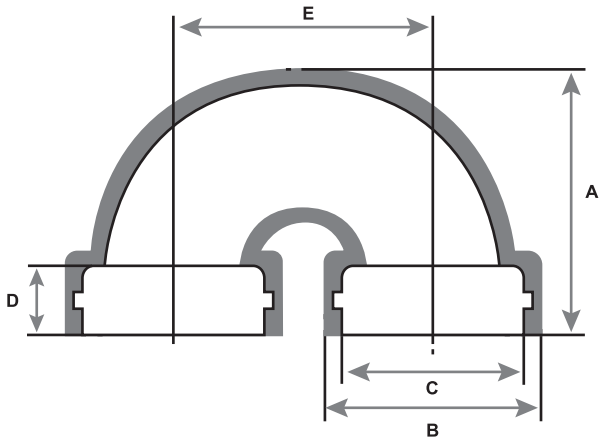



BRONZE
ASTM B61 / QQ-C-390 / MIL-B-16541
(ALLOY C90300 / C92200)

AVAILABLE ALLOY: BRONZE

NOMINAL PIPE SIZE	3/4"	1"	1 1/4"	1 1/2"	2"	2 1/2"	3"	4"
SMI P/N	RBBSB150	RBBSB200	RBBSB250	RBBSB300	RBBSB400	RBBSB450	RBBSB500	RBBSB600
A	2.250	2.625	3.125	3.563	4.188	4.812	5.500	6.625
B	1.250	1.535	1.900	2.160	2.675	3.215	3.880	4.940
C	1.050 MIN - 1.053 MAX	1.315 MIN - 1.318 MAX	1.660 MIN - 1.663 MAX	1.900 MIN - 1.905 MAX	2.375 MIN - 2.380 MAX	2.875 MIN - 2.882 MAX	3.500 MIN - 3.507 MAX	4.500 MIN - 4.507 MAX
D	13/32	7/16	1/2	5/8	21/32	25/32	53/64	29/32
E	2	2 1/2	3	3 1/2	4	4 1/2	5	6

NOTES: Brazing rings IAW QQ-B-654, BCuP-5 are to be used with grooved ftting ends.
Fittings may be ordered with reduced ends.

SUNFLEX
METALLOY PVT. LTD.
AN ISO 9001:2015 CERTIFIED CO.

SUNFLEX
METALLOY PVT. LTD.
AN ISO 9001:2015 CERTIFIED CO.

SLIP COUPLING

SILVER BRAZE

Specifcation: MIL-F-1183

Pressure Rating: 400 PSIG (WOG)

Intended for use with Class 200 or 700
Copper Nickel Tube IAW MIL-T-16420
Copper Tube IAW MIL-T-24107
Brass Tube IAW MIL-T-20168

SERVICE RATING TABLE				
Nominal Pipe Size (INCHES)	Maximum Working Pressure (LB/IN²)	Maximum Temperature (°F)	Maximum Working Pressure (LB/IN²)	Maximum Temperature (°F)
1/4 through 6 Above 6	200 150	425 425	400 250	150 150

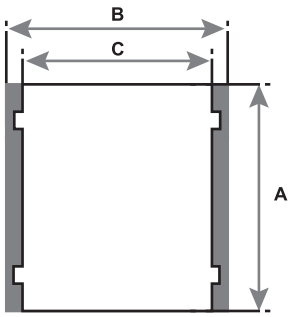



BRONZE
ASTM B61 / QQ-C-390 / MIL-B-16541
(ALLOY C90300 / C92200)

AVAILABLE ALLOY: BRONZE

NOMINAL PIPE SIZE	1/4"	3/8"	1/2"	3/4"	1"	1 1/4"	1 1/2"	2"	2 1/2"	3"	3 1/2"	4"
SMI P/N	SCOBSB040	SCOBSB060	SCOBSB100	SCOBSB150	SCOBSB200	SCOBSB250	SCOBSB300	SCOBSB400	SCOBSB450	SCOBSB500	SCOBSB550	SCOBSB600
A	0.97	1.05	1.29	1.43	1.68	1.86	1.92	2.20	2.88	3.18	3.43	3.69
B	0.81	1	1.17	1.42	1.72	2.1	2.38	2.92	3.49	4.2	4.75	5.31
C	0.540 MIN - 0.543 MAX	0.675 MIN - 0.678 MAX	0.840 MIN - 0.843 MAX	1.050 MIN - 1.053 MAX	1.315 MIN - 1.318 MAX	1.660 MIN - 1.663 MAX	1.900 MIN - 1.905 MAX	2.375 MIN - 2.380 MAX	2.875 MIN - 2.882 MAX	3.500 MIN - 3.507 MAX	4.00 MIN - 4.007 MAX	4.500 MIN - 4.507 MAX

NOTES: Brazing rings IAW QQ-B-654, BCuP-5 are to be used with grooved ftting ends.
Fittings may be ordered with reduced ends.

SUNFLEX
METALLOY PVT. LTD.
AN ISO 9001:2015 CERTIFIED CO.

SUNFLEX
METALLOY PVT. LTD.
AN ISO 9001:2015 CERTIFIED CO.

90° ELBOW SHORT RADIUS

SILVER BRAZE

Specifcation: MIL-F-1183
Pressure Rating: 400 PSIG (WOG)

Intended for use with Class 200 or 700
Copper Nickel Tube IAW MIL-T-16420
Copper Tube IAW MIL-T-24107
Brass Tube IAW MIL-T-20168

SERVICE RATING TABLE				
Nominal Pipe Size (INCHES)	Maximum Working Pressure (LB/IN^2)	Maximum Temperature (°F)	Maximum Working Pressure (LB/IN^2)	Maximum Temperature (°F)
1/4 through 6	200	425	400	150
Above 6	150	425	250	150

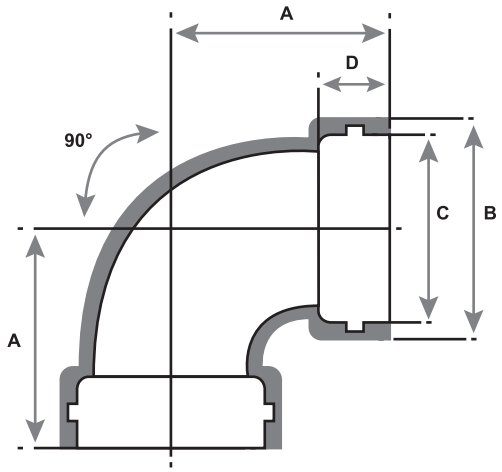



BRONZE
ASTM B61 / QQ-C-390 / MIL-B-16541
(ALLOY C90300 / C92200)

AVAILABLE ALLOY: BRONZE

NOMINAL PIPE SIZE	1/4"	3/8"	1/2"	3/4"	1"	1 1/4"	1 1/2"	2"	2 1/2"	3"	3 1/2"	4"
SMI P/N	9BSB040	9BSB060	9BSB100	9BSB150	9BSB200	9BSB250	9BSB300	9BSB400	9BSB450	9BSB500	9BSB550	9BSB600
A	0.71	0.82	1.01	1.18	1.43	1.69	1.84	2.12	2.70	3.08	3.42	3.79
B	0.700	0.855	1.020	1.250	1.535	1.900	2.160	2.675	3.215	3.880	4.400	4.940
C	0.540 MIN - 0.543 MAX	0.675 MIN - 0.678 MAX	0.840 MIN - 0.843 MAX	1.050 MIN - 1.053 MAX	1.315 MIN - 1.318 MAX	1.660 MIN - 1.663 MAX	1.900 MIN - 1.905 MAX	2.375 MIN - 2.380 MAX	2.875 MIN - 2.882 MAX	3.500 MIN - 3.507 MAX	4.00 MIN - 4.007 MAX	4.500 MIN - 4.507 MAX
D	17/64	5/16	3/8	13/32	7/16	1/2	5/8	21/32	25/32	53/64	7/8	29/32

NOTES: Brazing rings IAW QQ-B-654, BCuP-5 are to be used with grooved ftting ends.
Fittings may be ordered with reduced ends.

SUNFLEX
METALLOY PVT. LTD.
AN ISO 9001:2015 CERTIFIED CO.

SUNFLEX
METALLOY PVT. LTD.
AN ISO 9001:2015 CERTIFIED CO.

LONG TURN SINGLE SWEEP TEE

SILVER BRAZE

Specifcation: MIL-F-1183
Pressure Rating: 400 PSIG (WOG)

Intended for use with Class 200 or 700
Copper Nickel Tube IAW MIL-T-16420
Copper Tube IAW MIL-T-24107
Brass Tube IAW MIL-T-20168

SERVICE RATING TABLE

Nominal Pipe Size (INCHES)	Maximum Working Pressure (LB/IN²)	Maximum Temperature (°F)	Maximum Working Pressure (LB/IN²)	Maximum Temperature (°F)
1/4 through 6	200	425	400	150
Above 6	150	425	250	150

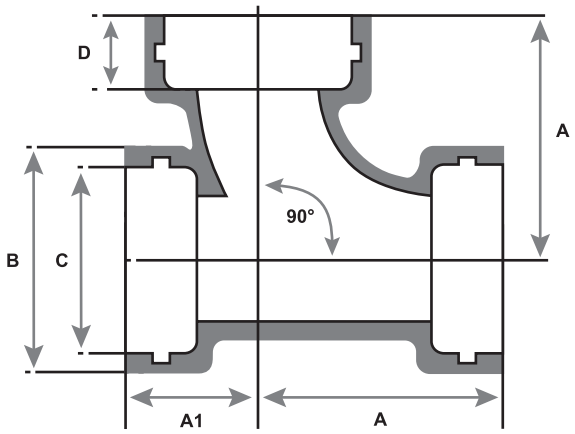



BRONZE
ASTM B61 / QQ-C-390 / MIL-B-16541
(ALLOY C90300 / C92200)

AVAILABLE ALLOY: BRONZE

NOMINAL PIPE SIZE	1/4"	3/8"	1/2"	3/4"	1"	1 1/4"	1 1/2"	2"	2 1/2"	3"	3 1/2"	4"
SMI P/N	SSTBSB040	SSTBSB060	SSTBSB100	SSTBSB150	SSTBSB200	SSTBSB250	SSTBSB300	SSTBSB400	SSTBSB450	SSTBSB500	SSTBSB550	SSTBSB600
A	1.25	1.50	1.75	2.00	2.31	2.75	3.13	3.75	4.50	5.44	6.19	6.94
A1	0.75	0.88	1.19	1.31	1.63	1.88	2.13	2.56	2.88	3.25	3.56	2.00
B	0.700	0.855	1.020	1.250	1.535	1.900	2.160	2.675	3.215	3.880	4.400	4.940
C	0.540 MIN - 0.543 MAX	0.675 MIN - 0.678 MAX	0.840 MIN - 0.843 MAX	1.050 MIN - 1.053 MAX	1.315 MIN - 1.318 MAX	1.660 MIN - 1.663 MAX	1.900 MIN - 1.905 MAX	2.375 MIN - 2.380 MAX	2.875 MIN - 2.882 MAX	3.500 MIN - 3.507 MAX	4.00 MIN - 4.007 MAX	4.500 MIN - 4.507 MAX
D	17/64	5/16	3/8	13/32	7/16	1/2	5/8	21/32	25/32	53/64	7/8	29/32

NOTES: Brazing rings IAW QQ-B-654, BCuP-5 are to be used with grooved fitting ends.
Fittings may be ordered with reduced ends.

SUNFLEX
METALLOY PVT. LTD.
AN ISO 9001:2015 CERTIFIED CO.

SUNFLEX
METALLOY PVT. LTD.
AN ISO 9001:2015 CERTIFIED CO.

STREET 90° ELBOW

SILVER BRAZE

Specifcation: MIL-F-1183
Pressure Rating: 400 PSIG (WOG)

Intended for use with Class 200 or 700
Copper Nickel Tube IAW MIL-T-16420
Copper Tube IAW MIL-T-24107
Brass Tube IAW MIL-T-20168

SERVICE RATING TABLE				
Nominal Pipe Size (INCHES)	Maximum Working Pressure (LB/IN²)	Maximum Temperature (°F)	Maximum Working Pressure (LB/IN²)	Maximum Temperature (°F)
1/4 through 6 Above 6	200 150	425 425	400 250	150 150

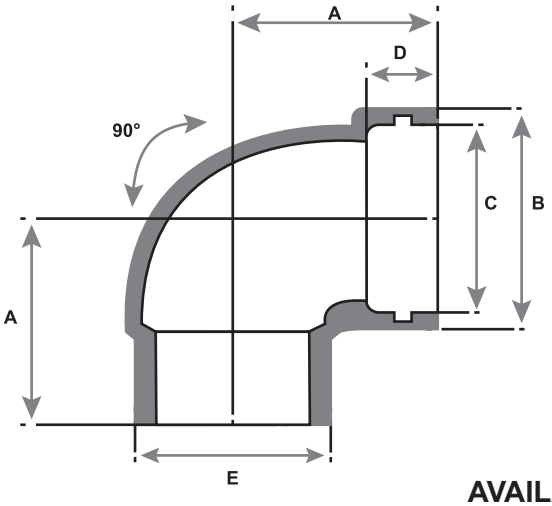



BRONZE
ASTM B61 / QQ-C-390 / MIL-B-16541
(ALLOY C90300 / C92200)

AVAILABLE ALLOY: BRONZE

NOMINAL PIPE SIZE	1/4"	3/8"	1/2"	3/4"	1"	1 1/4"	1 1/2"	2"
SMI P/N	ST9BSB040	ST9BSB060	ST9BSB100	ST9BSB150	ST9BSB200	ST9BSB250	ST9BSB300	ST9BSB400
A	1.19	1.25	1.47	1.19	1.44	2.25	2.47	2.88
B	0.700	0.855	1.020	1.250	1.535	1.900	2.160	2.675
C	0.540 MIN - 0.543 MAX	0.675 MIN - 0.678 MAX	0.840 MIN - 0.843 MAX	1.050 MIN - 1.053 MAX	1.315 MIN - 1.318 MAX	1.660 MIN - 1.663 MAX	1.900 MIN - 1.905 MAX	2.375 MIN - 2.380 MAX
D	17/64	5/16	3/8	13/32	7/16	1/2	5/8	21/32
E	.537 MIN - .540 MAX	.672 MIN - .675 MAX	.837 MIN - .840 MAX	1.047 MIN - 1.050 MAX	1.312 MIN - 1.315 MAX	1.657 MIN - 1.660 MAX	1.897 MIN - 1.900 MAX	2.372 MIN - 2.375 MAX

NOTES: Brazing rings IAW QQ-B-654, BCuP-5 are to be used with grooved ftting ends.
Fittings may be ordered with reduced ends.

SUNFLEX
METALLOY PVT. LTD.
AN ISO 9001:2015 CERTIFIED CO.

SUNFLEX
METALLOY PVT. LTD.
AN ISO 9001:2015 CERTIFIED CO.

UNION TAILPIECE

SILVER BRAZE

Specifcation: MIL-F-1183

Pressure Rating: 400 PSIG (WOG)

Intended for use with Class 200 or 700
Copper Nickel Tube IAW MIL-T-16420
Copper Tube IAW MIL-T-24107
Brass Tube IAW MIL-T-20168

SERVICE RATING TABLE				
Nominal Pipe Size (INCHES)	Maximum Working Pressure (LB/IN²)	Maximum Temperature (°F)	Maximum Working Pressure (LB/IN²)	Maximum Temperature (°F)
1/4 through 6 Above 6	200 150	425 425	400 250	150 150

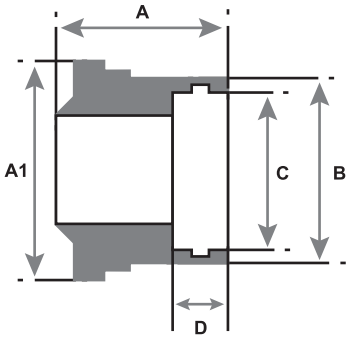



BRONZE
ASTM B61 / QQ-C-390 / MIL-B-16541
(ALLOY C90300 / C92200)



AVAILABLE ALLOY: BRONZE

NOMINAL PIPE SIZE	1/4"	3/8"	1/2"	3/4"	1"	1 1/4"	1 1/2"	2"
SMI P/N	TPBSB040	TPBSB060	TPBSB100	TPBSB150	TPBSB200	TPBSB250	TPBSB300	TPBSB400
A	.874 (+/- .020)	.959 (+/- .020)	1.049 (+/- .020)	1.154 (+/- .020)	1.299 (+/- .020)	1.469 (+/- .020)	1.619 (+/- .020)	1.854 (+/- .020)
A1	0.965	1.135	1.345	1.650	1.975	2.395	2.710	3.310
B	0.700	0.855	1.020	1.250	1.535	1.900	2.160	2.675
C	0.540 MIN - 0.543 MAX	0.675 MIN - 0.678 MAX	0.840 MIN - 0.843 MAX	1.050 MIN - 1.053 MAX	1.315 MIN - 1.318 MAX	1.660 MIN - 1.663 MAX	1.900 MIN - 1.905 MAX	2.375 MIN - 2.380 MAX
D	17/64	5/16	3/8	13/32	7/16	1/2	5/8	21/32

NOTES: Brazing rings IAW QQ-B-654, BCuP-5 are to be used with grooved ftting ends.
Fittings may be ordered with reduced ends.

SUNFLEX
METALLOY PVT. LTD.
AN ISO 9001:2015 CERTIFIED CO.

SUNFLEX
METALLOY PVT. LTD.
AN ISO 9001:2015 CERTIFIED CO.

TEE

SILVER BRAZE

Specifcation: MIL-F-1183
Pressure Rating: 400 PSIG (WOG)

Intended for use with Class 200 or 700
Copper Nickel Tube IAW MIL-T-16420
Copper Tube IAW MIL-T-24107
Brass Tube IAW MIL-T-20168

SERVICE RATING TABLE				
Nominal Pipe Size (INCHES)	Maximum Working Pressure (LB/IN²)	Maximum Temperature (°F)	Maximum Working Pressure (LB/IN²)	Maximum Temperature (°F)
1/4 through 6 Above 6	200 150	425 425	400 250	150 150

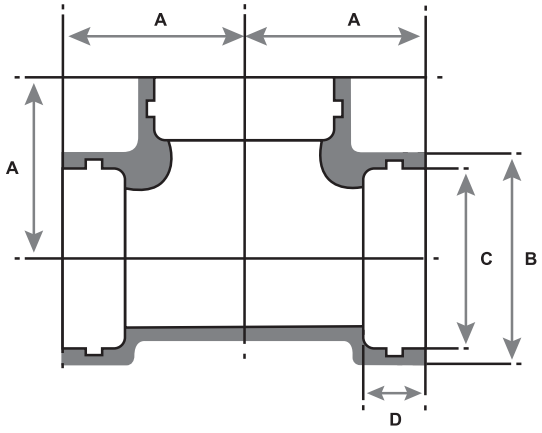



BRONZE
ASTM B61 / QQ-C-390 / MIL-B-16541
(ALLOY C90300 / C92200)

AVAILABLE ALLOY: BRONZE

NOMINAL PIPE SIZE	1/4"	3/8"	1/2"	3/4"	1"	1 1/4"	1 1/2"	2"	2 1/2"	3"	3 1/2"	4"
SMI P/N	TBSB040	TBSB060	TBSB100	TBSB150	TBSB200	TBSB250	TBSB300	TBSB400	TBSB450	TBSB500	TBSB550	TBSB600
A	0.72	0.81	1.00	1.19	1.43	1.69	1.84	2.13	2.69	3.09	3.44	3.78
B	0.700	0.855	1.020	1.250	1.535	1.900	2.160	2.675	3.215	3.880	4.400	4.940
C	0.540 MIN - 0.543 MAX	0.675 MIN - 0.678 MAX	0.840 MIN - 0.843 MAX	1.050 MIN - 1.053 MAX	1.315 MIN - 1.318 MAX	1.660 MIN - 1.663 MAX	1.900 MIN - 1.905 MAX	2.375 MIN - 2.380 MAX	2.875 MIN - 2.882 MAX	3.500 MIN - 3.507 MAX	4.00 MIN - 4.007 MAX	4.500 MIN - 4.507 MAX
D	17/64	5/16	3/8	13/32	7/16	1/2	5/8	21/32	25/32	53/64	7/8	29/32

NOTES: Brazing rings IAW QQ-B-654, BCuP-5 are to be used with grooved ftting ends.
Fittings may be ordered with reduced ends.

SUNFLEX
METALLOY PVT. LTD.
AN ISO 9001:2015 CERTIFIED CO.

SUNFLEX
METALLOY PVT. LTD.
AN ISO 9001:2015 CERTIFIED CO.

UNION THREADPIECE

SILVER BRAZE

Specifcation: MIL-F-1183

Pressure Rating: 400 PSIG (WOG)

Intended for use with Class 200 or 700
Copper Nickel Tube IAW MIL-T-16420
Copper Tube IAW MIL-T-24107
Brass Tube IAW MIL-T-20168

SERVICE RATING TABLE				
Nominal Pipe Size (INCHES)	Maximum Working Pressure (LB/IN²)	Maximum Temperature (°F)	Maximum Working Pressure (LB/IN²)	Maximum Temperature (°F)
1/4 through 6 Above 6	200 150	425 425	400 250	150 150

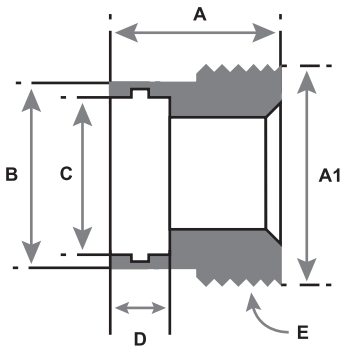



BRONZE
ASTM B61 / QQ-C-390 / MIL-B-16541
(ALLOY C90300 / C92200)



AVAILABLE ALLOY: BRONZE

NOMINAL PIPE SIZE	1/4"	3/8"	1/2"	3/4"	1"	1 1/4"	1 1/2"	2"
SMI P/N	THBSB040	THBSB060	THBSB100	THBSB150	THBSB200	THBSB250	THBSB300	THBSB400
A	0.85 (+/- 0.02)	.94 (+/- 0.02)	.99 (+/- 0.02)	1.18 (+/- 0.02)	1.26 (+/- 0.02)	1.43 (+/- 0.02)	1.52 (+/- 0.02)	1.67 (+/- 0.02)
A1	1.0846 MIN - 1.0940 MAX	1.2697 MIN - 1.2800 MAX	1.4764 MIN - 1.4867 MAX	1.8172 MIN - 1.8293 MAX	2.1471 MIN - 2.1592 MAX	2.5821 MIN - 2.590 MAX	2.9021 MIN - 2.9150 MAX	3.5020 MIN - 3.5149 MAX
B	0.700	0.855	1.020	1.250	1.535	1.900	2.160	2.675
C	0.540 MIN - 0.543 MAX	0.675 MIN - 0.678 MAX	0.840 MIN - 0.843 MAX	1.050 MIN - 1.053 MAX	1.315 MIN - 1.318 MAX	1.660 MIN - 1.663 MAX	1.900 MIN - 1.905 MAX	2.375 MIN - 2.380 MAX
D	17/64	5/16	3/8	13/32	7/16	1/2	5/8	21/32
E	16-UNS	14-UNS	14-UNS	11-UNS	11-UNS	10-UNS	10-UNS	10-UNS

NOTES: Brazing rings IAW QQ-B-654, BCuP-5 are to be used with grooved ftting ends.
Fittings may be ordered with reduced ends.

SUNFLEX
METALLOY PVT. LTD.
AN ISO 9001:2015 CERTIFIED CO.

SUNFLEX
METALLOY PVT. LTD.
AN ISO 9001:2015 CERTIFIED CO.

UNION 90° ELBOW

SILVER BRAZE

Specifcation: MIL-F-1183
Pressure Rating: 400 PSIG (WOG)

Intended for use with Class 200 or 700
Copper Nickel Tube IAW MIL-T-16420
Copper Tube IAW MIL-T-24107
Brass Tube IAW MIL-T-20168

SERVICE RATING TABLE				
Nominal Pipe Size (INCHES)	Maximum Working Pressure (LB/IN²)	Maximum Temperature (°F)	Maximum Working Pressure (LB/IN²)	Maximum Temperature (°F)
1/4 through 6 Above 6	200 150	425 425	400 250	150 150



BRONZE
ASTM B61 / QQ-C-390 / MIL-B-16541
(ALLOY C90300 / C92200)

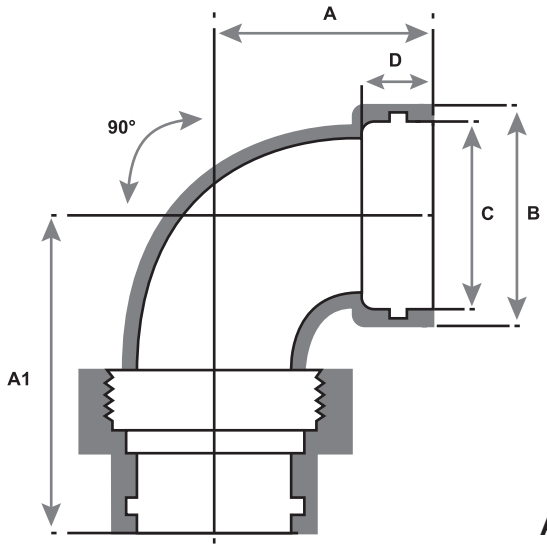

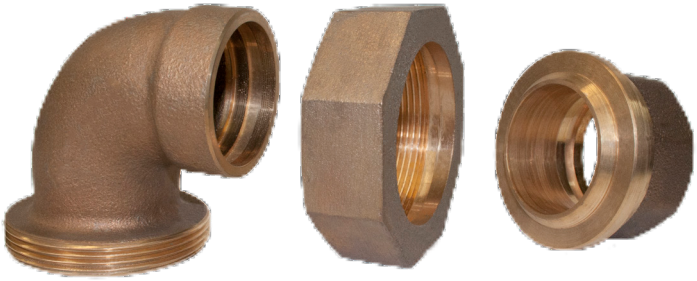

AVAILABLE ALLOY: BRONZE

NOMINAL PIPE SIZE	1/4"	3/8"	1/2"	3/4"	1"	1 1/4"	1 1/2"	2"
SMI P/N	U9BSB040	U9BSB060	U9BSB100	U9BSB150	U9BSB200	U9BSB250	U9BSB300	U9BSB400
A	15/16	1 1/16	1 1/4	1 7/16	1 5/8	1 15/16	2 1/8	2 1/2
A1	1 15/16	2 7/32	2 13/32	2 7/8	3 5/32	3 21/32	3 15/16	4 1/2
B	0.700	0.855	1.020	1.250	1.535	1.900	2.160	2.675
C	0.540 MIN - 0.543 MAX.	0.675 MIN. - 0.678 MAX.	0.840 MIN. - 0.843 MAX.	1.050 MIN. - 1.053 MAX.	1.315 MIN. - 1.318 MAX.	1.660 MIN. - 1.663 MAX.	1.900 MIN. - 1.905 MAX.	2.375 MIN. - 2.380 MAX.
D	17/64	5/16	3/8	13/32	7/16	1/2	5/8	21/32

NOTES: Brazing rings IAW QQ-B-654, BCuP-5 are to be used with grooved ftting ends.
Fittings may be ordered with reduced ends.

SUNFLEX
METALLOY PVT. LTD.
AN ISO 9001:2015 CERTIFIED CO.

SUNFLEX
METALLOY PVT. LTD.
AN ISO 9001:2015 CERTIFIED CO.

UNION ASSEMBLY

SILVER BRAZE

Specifcation: MIL-F-1183
Pressure Rating: 400 PSIG (WOG)

Intended for use with Class 200 or 700
Copper Nickel Tube IAW MIL-T-16420
Copper Tube IAW MIL-T-24107
Brass Tube IAW MIL-T-20168

SERVICE RATING TABLE				
Nominal Pipe Size (INCHES)	Maximum Working Pressure (LB/IN²)	Maximum Temperature (°F)	Maximum Working Pressure (LB/IN²)	Maximum Temperature (°F)
1/4 through 6 Above 6	200 150	425 425	400 250	150 150

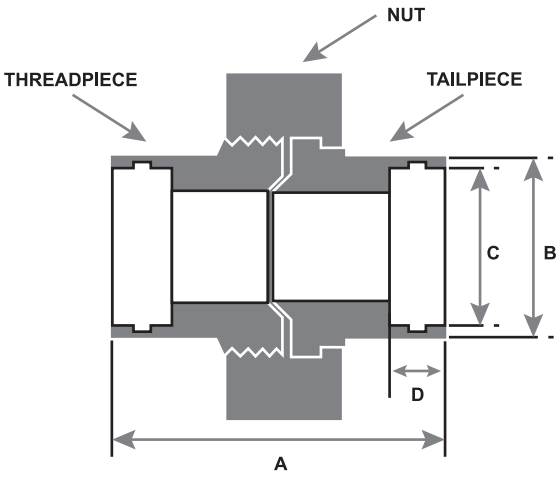



BRONZE
ASTM B61 / QQ-C-390 / MIL-B-16541
(ALLOY C90300 / C92200)

AVAILABLE ALLOY: BRONZE

NOMINAL PIPE SIZE	1/4"	3/8"	1/2"	3/4"	1"	1 1/4"	1 1/2"	2"
SMI P/N	UBSB040	UBSB060	UBSB100	UBSB150	UBSB200	UBSB250	UBSB300	UBSB400
A	1.63	1.81	1.94	2.25	2.44	2.78	3.00	3.38
B	0.700	0.855	1.020	1.250	1.535	1.900	2.160	2.675
C	0.540 MIN - 0.543 MAX	0.675 MIN - 0.678 MAX	0.840 MIN - 0.843 MAX	1.050 MIN - 1.053 MAX	1.315 MIN - 1.318 MAX	1.660 MIN - 1.663 MAX	1.900 MIN - 1.905 MAX	2.375 MIN - 2.380 MAX
D	17/64	5/16	3/8	13/32	7/16	1/2	5/8	21/32

NOTES: Brazing rings IAW QQ-B-654, BCuP-5 are to be used with grooved fting ends.
Fittings may be ordered with reduced ends.

SUNFLEX
METALLOY PVT. LTD.
AN ISO 9001:2015 CERTIFIED CO.

SUNFLEX
METALLOY PVT. LTD.
AN ISO 9001:2015 CERTIFIED CO.

UNION NUT

SILVER BRAZE

Specifcation: MIL-F-1183
Pressure Rating: 400 PSIG (WOG)

Intended for use with Class 200 or 700
Copper Nickel Tube IAW MIL-T-16420
Copper Tube IAW MIL-T-24107
Brass Tube IAW MIL-T-20168

SERVICE RATING TABLE				
Nominal Pipe Size (INCHES)	Maximum Working Pressure (LB/IN²)	Maximum Temperature (°F)	Maximum Working Pressure (LB/IN²)	Maximum Temperature (°F)
1/4 through 6 Above 6	200 150	425 425	400 250	150 150

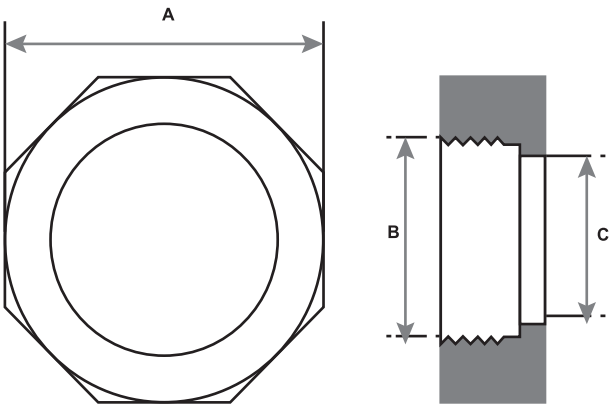



BRONZE
ASTM B61 / QQ-C-390 / MIL-B-16541
(ALLOY C90300 / C92200)

AVAILABLE ALLOY: BRONZE

NOMINAL PIPE SIZE	1/4"	3/8"	1/2"	3/4"	1"	1 1/4"	1 1/2"	2"
SMI P/N	UNBSB040	UNBSB060	UNBSB100	UNBSB150	UNBSB200	UNBSB250	UNBSB300	UNBSB400
A	0.965	1.135	1.345	1.650	1.975	2.395	2.710	3.310
B	1.0278 MIN - 1.0348 MAX	1.2043 MIN - 1.2122 MAX	1.4111 MIN - 1.4190 MAX	1.7326 MIN - 1.7424 MAX	2.0626 MIN - 2.0724 MAX	2.4487 MIN - 2.4992 MAX	2.8087 MIN - 2.8192 MAX	3.4087 MIN - 3.4192 MAX
C	0.860	1.020	1.220	1.510	1.820	2.220	2.520	3.090

NOTES: Brazing rings IAW QQ-B-654, BCuP-5 are to be used with grooved ftting ends.
Fittings may be ordered with reduced ends.

SUNFLEX
METALLOY PVT. LTD.
AN ISO 9001:2015 CERTIFIED CO.

SUNFLEX
METALLOY PVT. LTD.
AN ISO 9001:2015 CERTIFIED CO.

UNION BRANCH TEE

SILVER BRAZE

Intended for use with Class 200 or 700
Copper Nickel Tube IAW MIL-T-16420
Copper Tube IAW MIL-T-24107
Brass Tube IAW MIL-T-20168

Specifcation: MIL-F-1183
Pressure Rating: 400 PSIG (WOG)

SERVICE RATING TABLE				
Nominal Pipe Size (INCHES)	Maximum Working Pressure (LB/IN^2)	Maximum Temperature (°F)	Maximum Working Pressure (LB/IN^2)	Maximum Temperature (°F)
1/4 through 6	200	425	400	150
Above 6	150	425	250	150

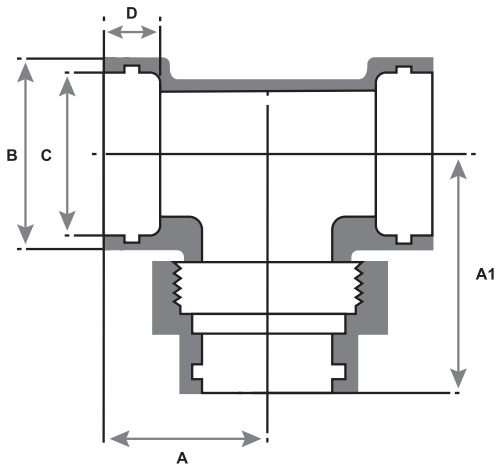



BRONZE
ASTM B61 / QQ-C-390 / MIL-B-16541
(ALLOY C90300 / C92200)

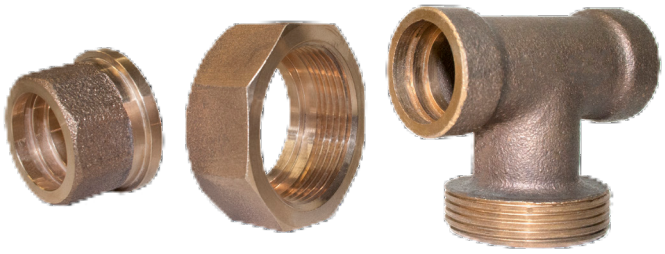

AVAILABLE ALLOY: BRONZE

NOMINAL PIPE SIZE	1/4"	3/8"	1/2"	3/4"	1"	1 1/4"	1 1/2"	2"
SMI P/N	UBTBSB040	UBTBSB060	UBTBSB100	UBTBSB150	UBTBSB200	UBTBSB250	UBTBSB300	UBTBSB400
A	15/16	1 1/16	1 1/4	1 7/16	1 5/8	1 15/16	2 1/8	2 1/2
A1	1 5/16	2 7/32	2 13/32	2 7/8	3 5/32	3 21/32	3 15/16	4 1/2
B	0.700	0.855	1.020	1.250	1.535	1.900	2.160	2.675
C	0.540 MIN - 0.543 MAX.	0.675 MIN. - 0.678 MAX.	0.840 MIN. - 0.843 MAX.	1.050 MIN. - 1.053 MAX.	1.315 MIN. - 1.318 MAX.	1.660 MIN. - 1.663 MAX.	1.900 MIN. - 1.905 MAX.	2.375 MIN. - 2.380 MAX.
D	17/64	5/16	3/8	13/32	7/16	1/2	5/8	21/32

NOTES: Brazing rings IAW QQ-B-654, BCuP-5 are to be used with grooved ftting ends.
Fittings may be ordered with reduced ends.

SUNFLEX
METALLOY PVT. LTD.
AN ISO 9001:2015 CERTIFIED CO.

SUNFLEX
METALLOY PVT. LTD.
AN ISO 9001:2015 CERTIFIED CO.

CAP
BUTT WELD

Specifcation: NAVSEA DWG 810-1385880
Pressure Rating: 200 PSIG (WOG)

Intended for use with Class 200
Copper Nickel Tube IAW MIL-T-16420

SERVICE RATING TABLE		
Nominal Pipe Size (INCHES)	Maximum Working Pressure (LB/IN²)	Maximum Temperature (°F)
1/4 through 12	200	150



90/10 CUNI
(ALLOY C70600)



70/30 CUNI
(ALLOY C71500)

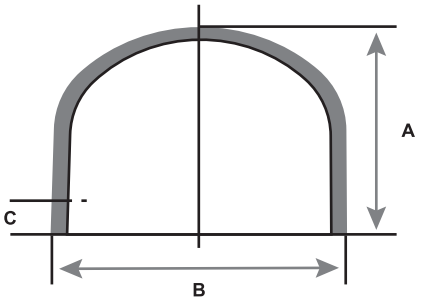

EDGE PREPARATION FOR WELDING

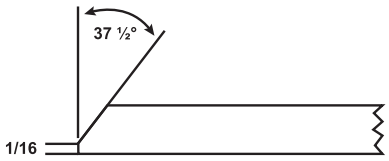

Square edge for 0.095 wall or lighter.
For heavier than 0.095 wall, beveled as shown.

AVAILABLE ALLOYS: CUNI 90/10 & CUNI 70/30

NOMINAL PIPE SIZE	SMI P/N (90/10)	SMI P/N (70/30)	A	B	C MIN
1"	CA9BW200	CA7BW200	1.50	1.315	0.50
1 1/4"	CA9BW250	CA7BW250	1.50	1.660	0.56
1 1/2"	CA9BW300	CA7BW300	1.50	1.900	0.69
2"	CA9BW400	CA7BW400	1.50	2.375	0.72
2 1/2"	CA9BW450	CA7BW450	1.50	2.875	0.88
3"	CA9BW500	CA7BW500	2.00	3.500	0.91
3 1/2"	CA9BW550	CA7BW550	2.50	4.000	0.94
4"	CA9BW600	CA7BW600	2.50	4.500	0.97
5"	CA9BW700	CA7BW700	3.00	5.563	1.09
6"	CA9BW800	CA7BW800	3.50	6.625	1.17
8"	CA9BW900	CA7BW900	4.00	8.625	1.38
10"	CA9BW1000	CA7BW1000	5.00	10.750	1.56
12"	CA9BW1100	CA7BW1100	6.00	12.750	1.69

NOTES: Fittings may be ordered with reduced ends.
Sizes not shown may be available upon request.

SUNFLEX
METALLOY PVT. LTD.
AN ISO 9001:2015 CERTIFIED CO.

SUNFLEX
METALLOY PVT. LTD.
AN ISO 9001:2015 CERTIFIED CO.

CONCENTRIC REDUCER

BUTT WELD

Specifcation: NAVSEA DWG 810-1385880

Pressure Rating: 200 PSIG (WOG)

Intended for use with Class 200 Copper Nickel Tube IAW MIL-T-16420

SERVICE RATING TABLE		
Nominal Pipe Size (INCHES)	Maximum Working Pressure (LB/IN^2)	Maximum Temperature (°F)
1/4 through 12	200	150

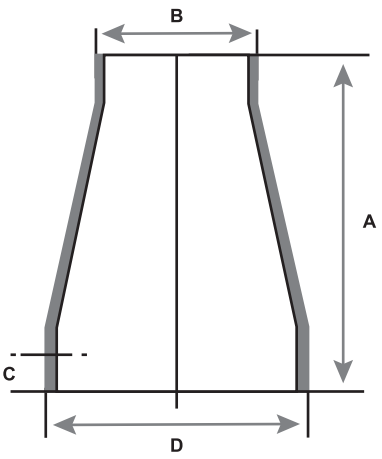



90/10 CUNI (ALLOY C70600)



70/30 CUNI (ALLOY C71500)

AVAILABLE ALLOYS: CUNI 90/10 & CUNI 70/30

NOMINAL PIPE SIZE	SMI P/N (90/10)	SMI P/N (70/30)	A	B	C MIN	D
1/2 x 1/4"	CR9BW100-040	CR7BW100-040	1.50	0.540	0.44	0.840
1/2 x 3/8"	CR9BW100-060	CR7BW100-060	1.50	0.675	0.44	0.840
3/4 x 1/2"	CR9BW150-100	CR7BW150-100	1.50	0.840	0.47	1.050
1 x 1/2"	CR9BW200-100	CR7BW200-100	2	0.840	0.50	1.315
1 x 3/4"	CR9BW200-150	CR7BW200-150	2	1.050	0.50	1.315
1 1/4 x 3/4"	CR9BW250-150	CR7BW250-150	2	1.050	0.56	1.660
1 1/4 x 1"	CR9BW250-200	CR7BW250-200	2	1.315	0.56	1.660
1 1/2 x 1/2"	CR9BW300-100	CR7BW300-100	2.50	0.840	0.69	1.900
1 1/2 x 3/4"	CR9BW300-150	CR7BW300-150	2.50	1.050	0.69	1.900
1 1/2 x 1"	CR9BW300-200	CR7BW300-200	2.50	1.315	0.69	1.900
1 1/2 x 1 1/4"	CR9BW300-250	CR7BW300-250	2.50	1.660	0.69	1.900
2 x 1/2"	CR9BW400-100	CR7BW400-100	3	0.840	0.72	2.375
2 x 3/4"	CR9BW400-150	CR7BW400-150	3	1.050	0.72	2.375
2 x 1"	CR9BW400-200	CR7BW400-200	3	1.315	0.72	2.375
2 x 1 1/4"	CR9BW400-250	CR7BW400-250	3	1.660	0.72	2.375
2 x 1 1/2"	CR9BW400-300	CR7BW400-300	3	1.900	0.72	2.375
2 1/2 x 3/4"	CR9BW450-150	CR7BW450-150	3.50	1.050	0.88	2.875

NOTES: Fittings may be ordered with reduced ends. Sizes not shown may be available upon request.

EDGE PREPARATION FOR WELDING

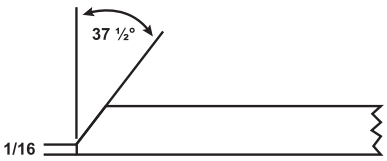

Square edge for 0.095 wall or lighter.
For heavier than 0.095 wall, beveled as shown.

SUNFLEX
METALLOY PVT. LTD.
AN ISO 9001:2015 CERTIFIED CO.

CONCENTRIC REDUCER

BUTT WELD

Specifcation: NAVSEA DWG 810-1385880
Pressure Rating: 200 PSIG (WOG)



90/10 CUNI
(ALLOY C70600)



70/30 CUNI
(ALLOY C71500)

Intended for use with Class 200
Copper Nickel Tube IAW MIL-T-16420

SERVICE RATING TABLE		
Nominal Pipe Size (INCHES)	Maximum Working Pressure (LB/IN^2)	Maximum Temperature (°F)
1/4 through 12	200	150

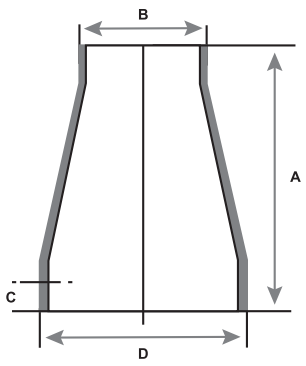

EDGE PREPARATION FOR WELDING

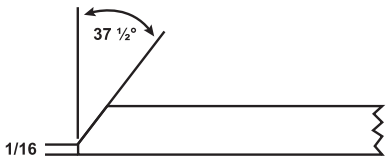

Square edge for 0.095 wall or lighter.
For heavier than 0.095 wall, beveled as shown.

AVAILABLE ALLOYS: CUNI 90/10 & CUNI 70/30

NOMINAL PIPE SIZE	SMI P/N (90/10)	SMI P/N (70/30)	A	B	C MIN	D
2 1/2 x 1"	CR9BW450-200	CR7BW450-200	3.500	1.315	0.88	2.875
2 1/2 x 1 1/4"	CR9BW450-250	CR7BW450-250	3.500	1.660	0.88	2.875
2 1/2 x 1 1/2"	CR9BW450-300	CR7BW450-300	3.500	1.900	0.88	2.875
2 1/2 x 2"	CR9BW450-400	CR7BW450-400	3.500	2.375	0.88	2.875
3 x 1"	CR9BW500-200	CR7BW500-200	3.500	1.315	0.91	3.500
3 x 1 1/4"	CR9BW500-250	CR7BW500-250	3.500	1.660	0.91	3.500
3 x 1 1/2"	CR9BW500-300	CR7BW500-300	3.500	1.900	0.91	3.500
3 x 2"	CR9BW500-400	CR7BW500-400	3.500	2.375	0.91	3.500
3 x 2 1/2"	CR9BW500-450	CR7BW500-450	3.500	2.875	0.91	3.500
3 1/2 x 1"	CR9BW550-200	CR7BW550-200	4	1.315	0.94	4.000
3 1/2 x 1 1/2"	CR9BW550-300	CR7BW550-300	4	1.990	0.94	4.000
3 1/2 x 2"	CR9BW550-400	CR7BW550-400	4	2.375	0.94	4.000
3 1/2 x 2 1/2"	CR9BW550-450	CR7BW550-450	4	2.875	0.94	4.000
3 1/2 x 3"	CR9BW550-500	CR7BW550-500	4	3.500	0.94	4.000
4 x 1"	CR9BW600-200	CR7BW600-200	4	1.315	0.97	4.500
4 x 1 1/4"	CR9BW600-250	CR7BW600-250	4	1.660	0.97	4.500
4 x 1 1/2"	CR9BW600-300	CR7BW600-300	4	1.900	0.97	4.500
4 x 2"	CR9BW600-400	CR7BW600-400	4	2.375	0.97	4.500
4 x 2 1/2"	CR9BW600-450	CR7BW600-450	4	2.875	0.97	4.500
4 x 3"	CR9BW600-500	CR7BW600-500	4	3.500	0.97	4.500
4 x 3 1/2"	CR9BW600-550	CR7BW600-550	4	4.000	0.97	4.500
5 x 2"	CR9BW700-400	CR7BW700-400	5	2.375	1.09	5.563
5 x 2 1/2"	CR9BW700-450	CR7BW700-450	5	2.875	1.09	5.563

NOTES: Fittings may be ordered with reduced ends. Sizes not shown may be available upon request.

SUNFLEX
METALLOY PVT. LTD.
AN ISO 9001:2015 CERTIFIED CO.

CONCENTRIC REDUCER

BUTT WELD

Specifcation: NAVSEA DWG 810-1385880
Pressure Rating: 200 PSIG (WOG)



90/10 CUNI
(ALLOY C70600)



70/30 CUNI
(ALLOY C71500)

Intended for use with Class 200
Copper Nickel Tube IAW MIL-T-16420

SERVICE RATING TABLE		
Nominal Pipe Size (INCHES)	Maximum Working Pressure (LB/IN^2)	Maximum Temperature (°F)
1/4 through 12	200	150

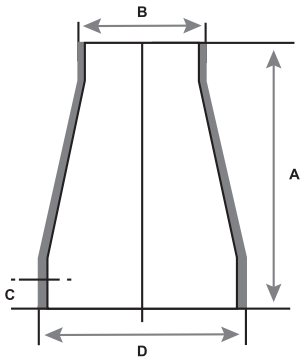

EDGE PREPARATION FOR WELDING

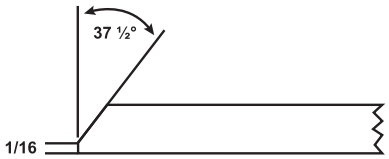

Square edge for 0.095 wall or lighter.
For heavier than 0.095 wall, beveled as shown.

AVAILABLE ALLOYS: CUNI 90/10 & CUNI 70/30

NOMINAL PIPE SIZE	SMI P/N (90/10)	SMI P/N (70/30)	A	B	C MIN	D
5 x 3"	CR9BW700-500	CR7BW700-500	5	3.500	1.09	5.563
5 x 3 1/2"	CR9BW700-550	CR7BW700-550	5	4.000	1.09	5.563
5 x 4"	CR9BW700-600	CR7BW700-600	5	4.500	1.09	5.563
6 x 2"	CR9BW800-400	CR7BW800-400	5.50	2.375	1.17	6.625
6 x 2 1/2"	CR9BW800-450	CR7BW800-450	5.50	2.875	1.17	6.625
6 x 3"	CR9BW800-500	CR7BW800-500	5.50	3.500	1.17	6.625
6 x 3 1/2"	CR9BW800-550	CR7BW800-550	5.50	4.000	1.17	6.625
6 x 4"	CR9BW800-600	CR7BW800-600	5.50	4.500	1.17	6.625
6 x 5"	CR9BW800-700	CR7BW800-700	5.50	5.563	1.17	6.625
8 x 3"	CR9BW900-500	CR7BW900-500	6	3.500	1.38	8.625
8 x 3 1/2"	CR9BW900-550	CR7BW900-550	6	4.000	1.38	8.625
8 x 4"	CR9BW900-600	CR7BW900-600	6	4.500	1.38	8.625
8 x 5"	CR9BW900-700	CR7BW900-700	6	5.563	1.38	8.625
8 x 6"	CR9BW900-800	CR7BW900-800	6	6.625	1.38	8.625
10 x 4"	CR9BW1000-600	CR7BW1000-600	7	4.500	1.56	10.750
10 x 5"	CR9BW1000-700	CR7BW1000-700	7	5.563	1.56	10.750
10 x 6"	CR9BW1000-800	CR7BW1000-800	7	6.625	1.56	10.750
10 x 8"	CR9BW1000-900	CR7BW1000-900	7	8.625	1.56	10.750
12 x 5"	CR9BW1100-700	CR7BW1100-700	8	5.563	1.69	12.750
12 x 6"	CR9BW1100-800	CR7BW1100-800	8	6.625	1.69	12.750
12 x 8"	CR9BW1100-900	CR7BW1100-900	8	8.625	1.69	12.750
12 x 10"	CR9BW1100-1000	CR7BW1100-1000	8	10.750	1.69	12.750

NOTES: Fittings may be ordered with reduced ends. Sizes not shown may be available upon request.

SUNFLEX
METALLOY PVT. LTD.
AN ISO 9001:2015 CERTIFIED CO.

CROSS
BUTT WELD

Specifcation: NAVSEA DWG 810-1385880
Pressure Rating: 200 PSIG (WOG)

Intended for use with Class 200
Copper Nickel Tube IAW MIL-T-16420

SERVICE RATING TABLE		
Nominal Pipe Size (INCHES)	Maximum Working Pressure (LB/IN^2)	Maximum Temperature (°F)
1/4 through 12	200	150

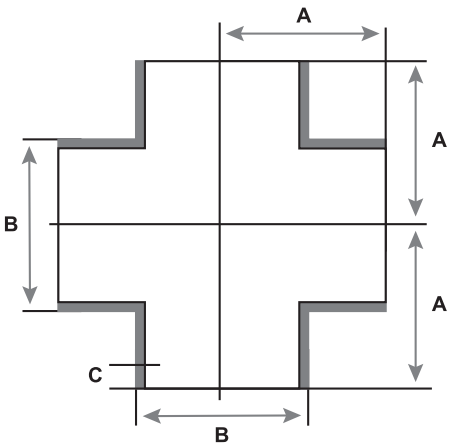



90/10 CUNI
(ALLOY C70600)



70/30 CUNI
(ALLOY C71500)

AVAILABLE ALLOYS: CUNI 90/10 & CUNI 70/30

NOMINAL PIPE SIZE	SMI P/N (90/10)	SMI P/N (70/30)	A	B	C MIN
1/4"	CRO9BW040	CRO7BW040	0.69	0.540	0.28
3/8"	CRO9BW060	CRO7BW060	0.91	0.675	0.38
1/2"	CRO9BW100	CRO7BW100	1.09	0.840	0.44
3/4"	CRO9BW150	CRO7BW150	1.25	1.050	0.47
1"	CRO9BW200	CRO7BW200	1.50	1.315	0.50
1 1/4"	CRO9BW250	CRO7BW250	1.88	1.660	0.56
1 1/2"	CRO9BW300	CRO7BW300	2.25	1.900	0.69
2"	CRO9BW400	CRO7BW400	2.50	2.375	0.72
2 1/2"	CRO9BW450	CRO7BW450	3.00	2.875	0.88
3"	CRO9BW500	CRO7BW500	3.38	3.500	0.91
3 1/2"	CRO9BW550	CRO7BW550	3.75	4.000	0.94
4"	CRO9BW600	CRO7BW600	4.13	4.500	0.97
5"	CRO9BW700	CRO7BW700	4.88	5.563	1.09
6"	CRO9BW800	CRO7BW800	5.63	6.625	1.17
8"	CRO9BW900	CRO7BW900	7.00	8.625	1.38
10"	CRO9BW1000	CRO7BW1000	8.50	10.750	1.56
12"	CRO9BW1100	CRO7BW1100	10.00	12.750	1.69

NOTES: Fittings may be ordered with reduced ends.
Sizes not shown may be available upon request.

EDGE PREPARATION FOR WELDING

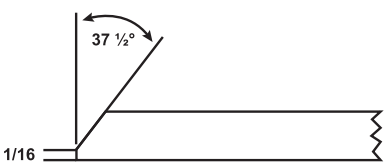

Square edge for 0.095 wall or lighter.
For heavier than 0.095 wall, beveled as shown.

SUNFLEX
METALLOY PVT. LTD.
AN ISO 9001:2015 CERTIFIED CO.

SUNFLEX
METALLOY PVT. LTD.
AN ISO 9001:2015 CERTIFIED CO.

LONG TURN DOUBLE SWEEP TEE

BUTT WELD

Specifcation: NAVSEA DWG 810-1385880

Pressure Rating: 200 PSIG (WOG)

Intended for use with Class 200 Copper Nickel Tube IAW MIL-T-16420

SERVICE RATING TABLE		
Nominal Pipe Size (INCHES)	Maximum Working Pressure (LB/IN^2)	Maximum Temperature (°F)
1/4 through 12	200	150



90/10 CUNI (ALLOY C70600)



70/30 CUNI (ALLOY C71500)

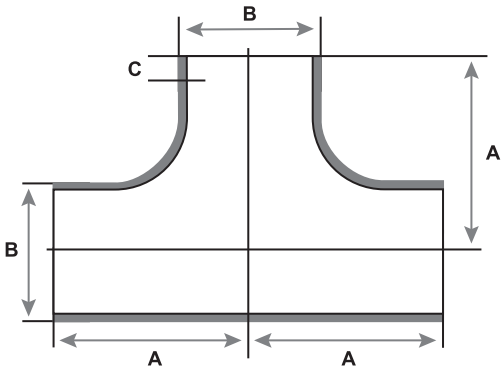

EDGE PREPARATION FOR WELDING

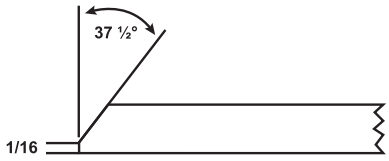

Square edge for 0.095 wall or lighter.
For heavier than 0.095 wall, beveled as shown.

AVAILABLE ALLOYS: CUNI 90/10 & CUNI 70/30

NOMINAL PIPE SIZE	SMI P/N (90/10)	SMI P/N (70/30)	A	B	C MIN
1 1/4"	DST9BW250	DST7BW250	2.44	1.660	0.56
1 1/2"	DST9BW300	DST7BW300	2.94	1.900	0.69
2"	DST9BW400	DST7BW400	3.72	2.375	0.72
2 1/2"	DST9BW450	DST7BW450	4.63	2.875	0.88
3"	DST9BW500	DST7BW500	5.41	3.500	0.91
3 1/2"	DST9BW550	DST7BW550	6.25	4.000	0.94
4"	DST9BW600	DST7BW600	6.97	4.500	0.97
5"	DST9BW700	DST7BW700	8.59	5.563	1.09
6"	DST9BW800	DST7BW800	10.17	6.625	1.17
8"	DST9BW900	DST7BW900	13.38	8.625	1.38

NOTES: Fittings may be ordered with reduced ends. Sizes not shown may be available upon request.

SUNFLEX
METALLOY PVT. LTD.
AN ISO 9001:2015 CERTIFIED CO.

SUNFLEX
METALLOY PVT. LTD.
AN ISO 9001:2015 CERTIFIED CO.

LATERAL
BUTT WELD

Specifcation: NAVSEA DWG 810-1385880
Pressure Rating: 200 PSIG (WOG)

Intended for use with Class 200 Copper Nickel Tube IAW MIL-T-16420

SERVICE RATING TABLE		
Nominal Pipe Size (INCHES)	Maximum Working Pressure (LB/IN²)	Maximum Temperature (°F)
¼ through 12	200	150

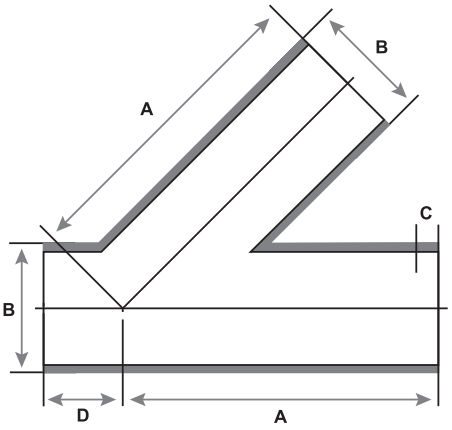



90/10 CUNI
(ALLOY C70600)



70/30 CUNI
(ALLOY C71500)

AVAILABLE ALLOYS: CUNI 90/10 & CUNI 70/30

NOMINAL PIPE SIZE	SMI P/N (90/10)	SMI P/N (70/30)	A	B	C MIN	D
1 1/4"	L9BW250	L7BW250	6.25	1.660	0.56	1.75
1 1/2"	L9BW300	L7BW300	7.00	1.900	0.69	2.00
2"	L9BW400	L7BW400	8.00	2.375	0.72	2.50
2 1/2"	L9BW450	L7BW450	9.50	2.875	0.88	2.50
3"	L9BW500	L7BW500	10.00	3.500	0.91	3.00
3 1/2"	L9BW550	L7BW550	11.50	4.000	0.94	3.00
4"	L9BW600	L7BW600	12.00	4.500	0.97	3.00
5"	L9BW700	L7BW700	13.50	5.563	1.09	3.50
6"	L9BW800	L7BW800	14.50	6.625	1.17	3.50
8"	L9BW900	L7BW900	17.50	8.625	1.38	4.50
10"	L9BW1000	L7BW1000	20.50	10.750	1.56	5.00
12"	L9BW1100	L7BW1100	24.50	12.750	1.69	5.50

NOTES: Fittings may be ordered with reduced ends. Sizes not shown may be available upon request.

EDGE PREPARATION FOR WELDING

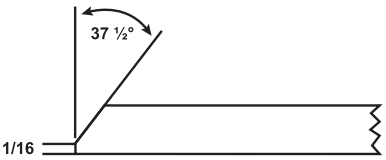

Square edge for 0.095 wall or lighter.
For heavier than 0.095 wall, beveled as shown.

SUNFLEX
METALLOY PVT. LTD.
AN ISO 9001:2015 CERTIFIED CO.

SUNFLEX
METALLOY PVT. LTD.
AN ISO 9001:2015 CERTIFIED CO.

45° ELBOW LONG RADIUS BUTT WELD

Specifcation: NAVSEA DWG 810-1385880
Pressure Rating: 200 PSIG (WOG)

Intended for use with Class 200 Copper Nickel Tube IAW MIL-T-16420

SERVICE RATING TABLE		
Nominal Pipe Size (INCHES)	Maximum Working Pressure (LB/IN^2)	Maximum Temperature (°F)
1/4 through 12	200	150

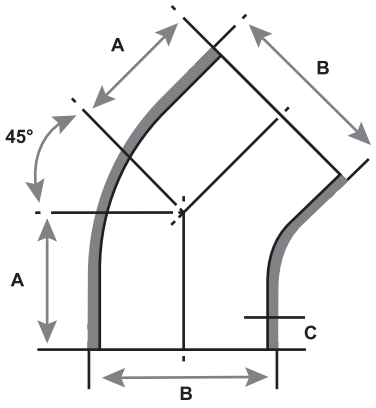



90/10 CUNI
(ALLOY C70600)



70/30 CUNI
(ALLOY C71500)

AVAILABLE ALLOYS: CUNI 90/10 & CUNI 70/30

NOMINAL PIPE SIZE	SMI P/N (90/10)	SMI P/N (70/30)	A	B	C MIN
1/4"	49BW040	47BW040	0.70	0.540	0.28
3/8"	49BW060	47BW060	0.89	0.675	0.38
1/2"	49BW100	47BW100	1.06	0.840	0.44
3/4"	49BW150	47BW150	0.94	1.050	0.47
1"	49BW200	47BW200	1.13	1.315	0.50
1 1/4"	49BW250	47BW250	1.69	1.660	0.56
1 1/2"	49BW300	47BW300	1.63	1.900	0.69
2"	49BW400	47BW400	1.97	2.375	0.72
2 1/2"	49BW450	47BW450	2.44	2.875	0.88
3"	49BW500	47BW500	2.77	3.500	0.91
3 1/2"	49BW550	47BW550	3.17	4.000	0.94
4"	49BW600	47BW600	3.45	4.500	0.97
5"	49BW700	47BW700	4.20	5.563	1.09
6"	49BW800	47BW800	4.91	6.625	1.17
8"	49BW900	47BW900	6.34	8.625	1.38
10"	49BW1000	47BW1000	7.78	10.750	1.56
12"	49BW1100	47BW1100	9.14	12.750	1.69

NOTES: Fittings may be ordered with reduced ends.
Sizes not shown may be available upon request.

EDGE PREPARATION FOR WELDING

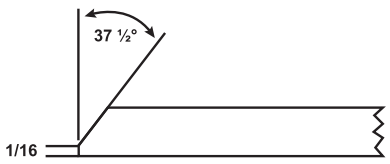

Square edge for 0.095 wall or lighter.
For heavier than 0.095 wall, beveled as shown.

SUNFLEX
METALLOY PVT. LTD.
AN ISO 9001:2015 CERTIFIED CO.

SUNFLEX
METALLOY PVT. LTD.
AN ISO 9001:2015 CERTIFIED CO.

90° ELBOW LONG RADIUS BUTT WELD

Specifcation: NAVSEA DWG 810-1385880
Pressure Rating: 200 PSIG (WOG)

Intended for use with Class 200 Copper Nickel Tube IAW MIL-T-16420

SERVICE RATING TABLE		
Nominal Pipe Size (INCHES)	Maximum Working Pressure (LB/IN^2)	Maximum Temperature (°F)
1/4 through 12	200	150

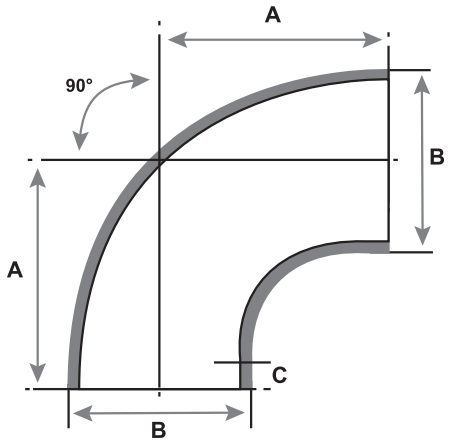



90/10 CUNI (ALLOY C70600)



70/30 CUNI (ALLOY C71500)

AVAILABLE ALLOYS: CUNI 90/10 & CUNI 70/30

NOMINAL PIPE SIZE	SMI P/N (90/10)	SMI P/N (70/30)	A	B	C MIN
1/4"	9L9BW040	9L7BW040	1.28	0.540	0.28
3/8"	9L9BW060	9L7BW060	1.63	0.675	0.38
1/2"	9L9BW100	9L7BW100	1.94	0.840	0.44
3/4"	9L9BW150	9L7BW150	1.59	1.050	0.47
1"	9L9BW200	9L7BW200	2.00	1.315	0.50
1 1/4"	9L9BW250	9L7BW250	2.44	1.660	0.56
1 1/2"	9L9BW300	9L7BW300	2.94	1.900	0.69
2"	9L9BW400	9L7BW400	3.72	2.375	0.72
2 1/2"	9L9BW450	9L7BW450	4.63	2.875	0.88
3"	9L9BW500	9L7BW500	5.41	3.500	0.91
3 1/2"	9L9BW550	9L7BW550	6.25	4.000	0.94
4"	9L9BW600	9L7BW600	6.97	4.500	0.97
5"	9L9BW700	9L7BW700	8.59	5.563	1.09
6"	9L9BW800	9L7BW800	10.17	6.625	1.17
8"	9L9BW900	9L7BW900	13.38	8.625	1.38
10"	9L9BW1000	9L7BW1000	16.56	10.750	1.56
12"	9L9BW1100	9L7BW1100	19.69	12.750	1.69

NOTES: Fittings may be ordered with reduced ends.
Sizes not shown may be available upon request.

EDGE PREPARATION FOR WELDING

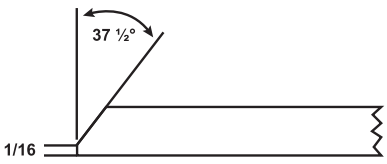

Square edge for 0.095 wall or lighter.
For heavier than 0.095 wall, beveled as shown.

SUNFLEX
METALLOY PVT. LTD.
AN ISO 9001:2015 CERTIFIED CO.

SUNFLEX
METALLOY PVT. LTD.
AN ISO 9001:2015 CERTIFIED CO.

RETURN BEND
BUTT WELD

Specifcation: NAVSEA DWG 810-1385880
Pressure Rating: 200 PSIG (WOG)

Intended for use with Class 200 Copper Nickel Tube IAW MIL-T-16420

SERVICE RATING TABLE		
Nominal Pipe Size (INCHES)	Maximum Working Pressure (LB/IN²)	Maximum Temperature (°F)
1/4 through 12	200	150



90/10 CUNI (ALLOY C70600)



70/30 CUNI (ALLOY C71500)

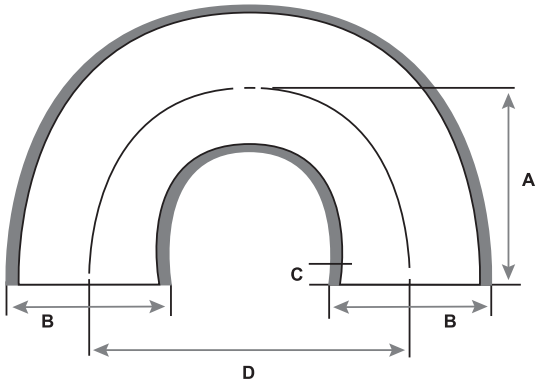

AVAILABLE ALLOYS: CUNI 90/10 & CUNI 70/30

NOMINAL PIPE SIZE	SMI P/N (90/10)	SMI P/N (70/30)	A	B	C MIN	D
1"	RB9BW200	RB7BW200	2.00	1.315	0.50	3.00
1 1/4"	RB9BW250	RB7BW250	2.44	1.660	0.56	3.75
1 1/2"	RB9BW300	RB7BW300	2.94	1.900	0.69	4.50
2"	RB9BW400	RB7BW400	3.72	2.375	0.72	6.00
2 1/2"	RB9BW450	RB7BW450	4.63	2.875	0.88	7.50
3"	RB9BW500	RB7BW500	5.41	3.500	0.91	9.00
3 1/2"	RB9BW550	RB7BW550	6.25	4.000	0.94	10.50
4"	RB9BW600	RB7BW600	6.97	4.500	0.97	12.00
5"	RB9BW700	RB7BW700	8.59	5.563	1.09	15.00
6"	RB9BW800	RB7BW800	10.17	6.625	1.17	18.00
8"	RB9BW900	RB7BW900	13.38	8.625	1.38	24.00
10"	RB9BW1000	RB7BW1000	16.56	10.750	1.56	30.00
12"	RB9BW1100	RB7BW1100	19.69	12.750	1.69	36.00

NOTES: Fittings may be ordered with reduced ends. Sizes not shown may be available upon request.

EDGE PREPARATION FOR WELDING

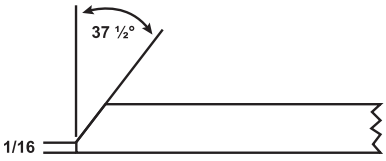

Square edge for 0.095 wall or lighter.
For heavier than 0.095 wall, beveled as shown.

SUNFLEX
METALLOY PVT. LTD.
AN ISO 9001:2015 CERTIFIED CO.

SUNFLEX
METALLOY PVT. LTD.
AN ISO 9001:2015 CERTIFIED CO.

SLEEVE
BUTT WELD

Specifcation: NAVSEA DWG 810-1385880
Pressure Rating: 200 PSIG (WOG)

Intended for use with Class 200
Copper Nickel Tube IAW MIL-T-16420

SERVICE RATING TABLE		
Nominal Pipe Size (INCHES)	Maximum Working Pressure (LB/IN^2)	Maximum Temperature (°F)
1/4 through 12	200	150

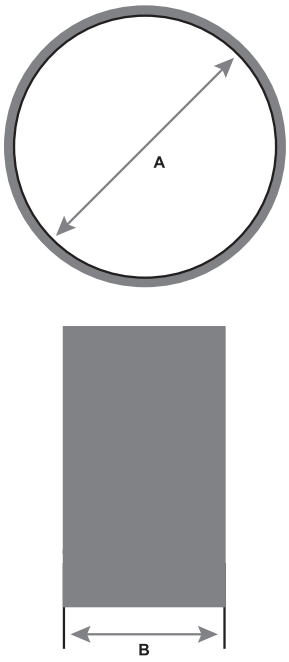



90/10 CUNI
(ALLOY C70600)



70/30 CUNI
(ALLOY C71500)

AVAILABLE ALLOYS: CUNI 90/10 & CUNI 70/30

NOMINAL PIPE SIZE	SMI P/N (90/10)	SMI P/N (70/30)	A	B
1/4"	S9BW040	S7BW040	0.540	17/32"
3/8"	S9BW060	S7BW060	0.675	5/8"
1/2"	S9BW100	S7BW100	0.840	3/4"
3/4"	S9BW150	S7BW150	1.050	13/16"
1"	S9BW200	S7BW200	1.315	7/8"
1 1/4"	S9BW250	S7BW250	1.660	1"
1 1/2"	S9BW300	S7BW300	1.900	1 1/4"
2"	S9BW400	S7BW400	2.375	1 5/16"
2 1/2"	S9BW450	S7BW450	2.875	1 9/16"
3"	S9BW500	S7BW500	3.500	1 21/32"
3 1/2"	S9BW550	S7BW550	4.000	1 3/4"
4"	S9BW600	S7BW600	4.500	1 13/16"
5"	S9BW700	S7BW700	5.563	2 1/16"
6"	S9BW800	S7BW800	6.625	2 7/32"
8"	S9BW900	S7BW900	8.625	2 5/8"
10"	S9BW1000	S7BW1000	10.750	3"
12"	S9BW1100	S7BW1100	12.750	3 1/4"

NOTES: Fittings may be ordered with reduced ends.
Sizes not shown may be available upon request.

EDGE PREPARATION FOR WELDING

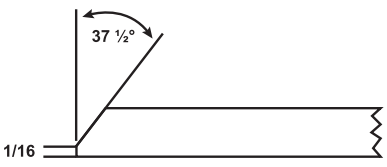

Square edge for 0.095 wall or lighter.
For heavier than 0.095 wall, beveled as shown.

SUNFLEX
METALLOY PVT. LTD.
AN ISO 9001:2015 CERTIFIED CO.

90° ELBOW SHORT RADIUS BUTT WELD

Specifcation: NAVSEA DWG 810-1385880
Pressure Rating: 200 PSIG (WOG)

Intended for use with Class 200 Copper Nickel Tube IAW MIL-T-16420

SERVICE RATING TABLE		
Nominal Pipe Size (INCHES)	Maximum Working Pressure (LB/IN^2)	Maximum Temperature (°F)
1/4 through 12	200	150

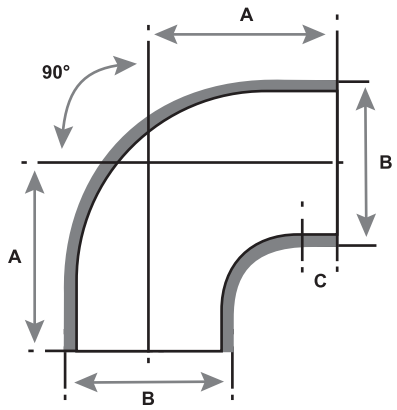



90/10 CUNI (ALLOY C70600)



70/30 CUNI (ALLOY C71500)

AVAILABLE ALLOYS: CUNI 90/10 & CUNI 70/30

NOMINAL PIPE SIZE	SMI P/N (90/10)	SMI P/N (70/30)	A	B	C MIN
1 1/2"	9S9BW200	9S7BW200	2.19	1.900	0.69
2"	9S9BW400	9S7BW400	2.72	2.375	0.72
2 1/2"	9S9BW450	9S7BW450	3.38	2.875	0.88
3"	9S9BW500	9S7BW500	3.91	3.500	0.91
3 1/2"	9S9BW550	9S7BW550	4.44	4.000	0.94
4"	9S9BW600	9S7BW600	4.97	4.500	0.97
5"	9S9BW700	9S7BW700	6.09	5.563	1.09
6"	9S9BW800	9S7BW800	7.17	6.625	1.17
8"	9S9BW900	9S7BW900	9.38	8.625	1.38
10"	9S9BW1000	9S7BW1000	11.56	10.750	1.56
12"	9S9BW1100	9S7BW1100	13.69	12.75	1.69

NOTES: Fittings may be ordered with reduced ends.
Sizes not shown may be available upon request.

EDGE PREPARATION FOR WELDING

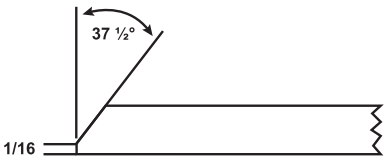

Square edge for 0.095 wall or lighter.
For heavier than 0.095 wall, beveled as shown.

SUNFLEX
METALLOY PVT. LTD.
AN ISO 9001:2015 CERTIFIED CO.

LONG TURN SINGLE SWEEP TEE

BUTT WELD

Specifcation: NAVSEA DWG 810-1385880

Pressure Rating: 200 PSIG (WOG)

Intended for use with Class 200 Copper Nickel Tube IAW MIL-T-16420

SERVICE RATING TABLE		
Nominal Pipe Size (INCHES)	Maximum Working Pressure (LB/IN^2)	Maximum Temperature (°F)
1/4 through 12	200	150

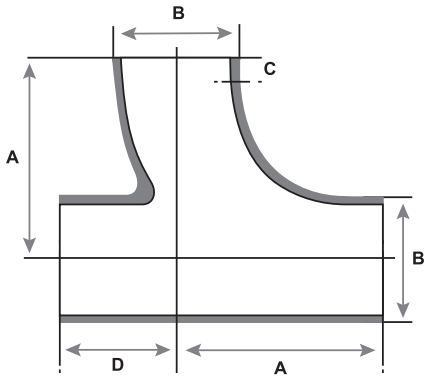



90/10 CUNI (ALLOY C70600)



70/30 CUNI (ALLOY C71500)

AVAILABLE ALLOYS: CUNI 90/10 & CUNI 70/30

NOMINAL PIPE SIZE	SMI P/N (90/10)	SMI P/N (70/30)	A	B	C MIN	D
1 1/4"	SST9BW250	SST7BW250	2.44	1.660	0.56	2.00
1 1/2"	SST9BW300	SST7BW300	2.94	1.900	0.69	2.25
2"	SST9BW400	SST7BW400	2.72	2.375	0.72	2.63
2 1/2"	SST9BW450	SST7BW450	4.63	2.875	0.88	3.13
3"	SST9BW500	SST7BW500	5.41	3.500	0.91	3.41
3 1/2"	SST9BW550	SST7BW550	6.25	4.000	0.94	3.44
4"	SST9BW600	SST7BW600	6.97	4.500	0.97	3.97
5"	SST9BW700	SST7BW700	8.59	5.563	1.09	5.09
6"	SST9BW800	SST7BW800	10.17	6.625	1.17	6.17
8"	SST9BW900	SST7BW900	13.38	8.625	1.38	8.88
10"	SST9BW1000	SST7BW1000	16.56	10.750	1.56	10.75

NOTES: Fittings may be ordered with reduced ends. Sizes not shown may be available upon request.

EDGE PREPARATION FOR WELDING

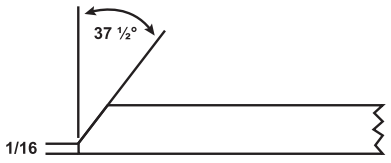

Square edge for 0.095 wall or lighter.
For heavier than 0.095 wall, beveled as shown.

SUNFLEX
METALLOY PVT. LTD.
AN ISO 9001:2015 CERTIFIED CO.

SUNFLEX
METALLOY PVT. LTD.
AN ISO 9001:2015 CERTIFIED CO.

FLANGE CHART

200# BUTTERFLY

Specifcation: NAVSEA DWG 810-4715319
Fig 2C (SW)
NAVSEA DWG 803-6983512
Fig 26-D / 31-D (SW)
NAVSEA DWG 810-1385892 (SB)

Flange Drilling: ANSI B16

SERVICE RATING TABLE		
FIGURE	SIZE	WOG
Butterfly	2 to 14	200 PSI at 180° F
	14, 16, 18	50 PSI at 150° F

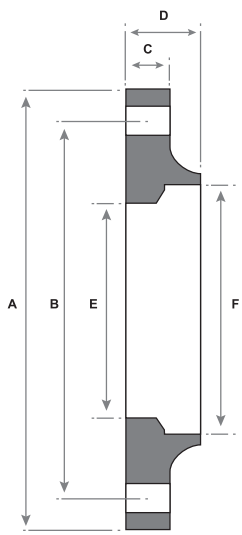

Butterfly

200# BUTTERFLY FLANGES									
SIZE	SMI P/N	A	C	B (Bolt Circle)	D	E	F MIN / MAX	№ of Holes	Drill Size
2"	FLB**XY**200-400	6	1/2	4 3/4	1	2.067	2.380 / 2.426	4	11/16
2 1/2"	FLB**XY**200-450	7	9/16	5 1/2	1 1/16	2.469	2.880 / 2.931	4	11/16
3"	FLB**XY**200-500	7.5	5/8	6	1 1/8	3.068	3.505 / 3.560	4	11/16
3 1/2"	FLB**XY**200-550	8.5	23/32	7	1 5/16	3.548	4.005 / 4.060	8	11/16
4"	FLB**XY**200-600	9	11/16	7 1/2	1 5/16	4.026	4.505 / 4.565	8	11/16
5"	FLB**XY**200-700	10	3/4	8 1/2	1 1/2	5.047	5.568 / 5.628	8	13/16
6"	FLB**XY**200-800	11	13/16	9 1/2	1 11/16	6.065	6.630 / 6.690	8	13/16
8"	FLB**XY**200-900	13.5	15/16	11 3/4	1 15/16	7.981	8.630 / 8.690	8	13/16
10"	FLB**XY**200-1000	16	1	14 1/4	2 1/8	10.020	10.755 / 10.815	12	15/16
12"	FLB**XY**200-1100	19	1 1/16	17	2 5/16	11.938	12.755 / 12.815	12	15/16
14"	FLB**XY**200-1200	21	1 3/16	18 3/4	2 9/16	13.250	14.005 / 14.065	12	1 1/16

*Replace **X** with the following codes for Material:*

*Cuni 70/30 - **7***
*Cuni 90/10 - **9***
*Bronze- **B***

*Replace **Y** with the following codes for Type:*

*Socket Weld - **SW***
*Silver Brazed - **SB***

SUNFLEX
METALLOY PVT. LTD.
AN ISO 9001:2015 CERTIFIED CO.

SUNFLEX
METALLOY PVT. LTD.
AN ISO 9001:2015 CERTIFIED CO.

45° ELBOW
BUTT WELD

Specifcation: ASME B16.9
Pressure Rating: SCHEDULE 40

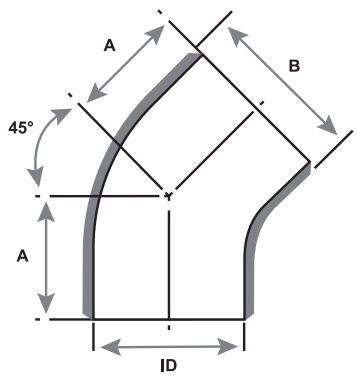





AVAILABLE ALLOYS:
(FERROUS) CARBON STEEL (A105) & STAINLESS STEEL (GRADES 304 / 316 / 321 / 347)
(NON-FERROUS) CUNI (90/10), NICU (MONEL), ALUMINUM (5086)
Additional materials available upon request.

NOMINAL PIPE SIZE	SMI P/N	A	B (OD)	ID	WALL THICKNESS
1/2"	4XBW40-100	0.62	0.84	0.622	0.109
3/4"	4XBW40-150	0.75	1.05	0.824	0.113
1"	4XBW40-200	0.88	1.32	1.054	0.133
1 1/4"	4XBW40-250	1.00	1.66	1.380	0.140
1 1/2"	4XBW40-300	1.12	1.90	1.610	0.145
2"	4XBW40-400	1.38	2.38	2.072	0.154
2 1/2"	4XBW40-450	1.75	2.88	2.474	0.203
3"	4XBW40-500	2.00	3.50	3.068	0.216
3 1/2"	4XBW40-550	2.25	4.00	3.548	0.226
4"	4XBW40-600	2.50	4.50	4.026	0.237
5"	4XBW40-700	3.12	5.56	5.044	0.258
6"	4XBW40-800	3.75	6.62	6.060	0.280
8"	4XBW40-900	5.00	8.62	7.976	0.322
10"	4XBW40-1000	6.25	10.75	10.020	0.365
12"	4XBW40-1100	7.50	12.75	11.938	0.406
14"	4XBW40-1200	8.75	14.00	13.124	0.438
16"	4XBW40-1300	10.00	16.00	15.000	0.500

NOTES: Sizes not shown may be available upon request.

For P/N's replace X with the following codes:

*Stainless Steel 304 - **304***
*Stainless Steel 316 - **316***
*Stainless Steel 321 - **321***
*Stainless Steel 347 - **347***
*Carbon Steel - **CS***
*Nicu (Monel) - **M***
*Aluminum Gr. 5086 - **A***
*Cuni 90/10 - **9***

SUNFLEX
METALLOY PVT. LTD.
AN ISO 9001:2015 CERTIFIED CO.

SUNFLEX
METALLOY PVT. LTD.
AN ISO 9001:2015 CERTIFIED CO.

CAP
BUTT WELD

Specifcation: ASME B16.9
Pressure Rating: SCHEDULE 40

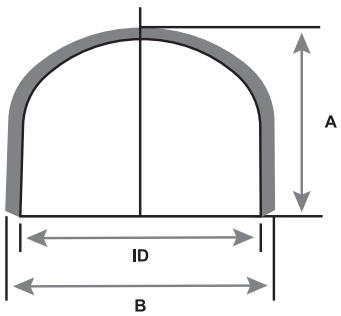





AVAILABLE ALLOYS:
(FERROUS) CARBON STEEL (A105) & STAINLESS STEEL (GRADES 304 / 316 / 321 / 347)
(NON-FERROUS) CUNI (90/10), NICU (MONEL), ALUMINUM (5086)
Additional materials available upon request.

NOMINAL PIPE SIZE	SMI P/N	A	B (OD)	ID	WALL THICKNESS
1/2"	CAXBW40-100	1.00	0.84	0.622	0.109
3/4"	CAXBW40-150	1.00	1.05	0.824	0.113
1"	CAXBW40-200	1.50	1.32	1.054	0.133
1 1/4"	CAXBW40-250	1.50	1.66	1.380	0.140
1 1/2"	CAXBW40-300	1.50	1.90	1.610	0.145
2"	CAXBW40-400	1.50	2.38	2.072	0.154
2 1/2"	CAXBW40-450	1.50	2.88	2.474	0.203
3"	CAXBW40-500	2.00	3.50	3.068	0.216
3 1/2"	CAXBW40-550	2.50	4.00	3.548	0.226
4"	CAXBW40-600	2.50	4.50	4.026	0.237
5"	CAXBW40-700	3.00	5.56	5.044	0.258
6"	CAXBW40-800	3.50	6.62	6.060	0.280
8"	CAXBW40-900	4.00	8.62	7.976	0.322
10"	CAXBW40-1000	5.00	10.75	10.020	0.365
12"	CAXBW40-1100	6.00	12.75	11.938	0.406
14"	CAXBW40-1200	6.50	14.00	13.124	0.438
16"	CAXBW40-1300	7.00	16.00	15.000	0.500

NOTES: Sizes not shown may be available upon request.

For P/N's replace X with the following codes:

*Stainless Steel 304 - **304***
*Stainless Steel 316 - **316***
*Stainless Steel 321 - **321***
*Stainless Steel 347 - **347***
*Carbon Steel - **CS***
*Nicu (Monel) - **M***
*Aluminum Gr. 5086 - **A***
*Cuni 90/10 - **9***

SUNFLEX
METALLOY PVT. LTD.
AN ISO 9001:2015 CERTIFIED CO.

SUNFLEX
METALLOY PVT. LTD.
AN ISO 9001:2015 CERTIFIED CO.

CONCENTRIC REDUCER

BUTT WELD

Specifcation: ASME B16.9
Pressure Rating: SCHEDULE 40

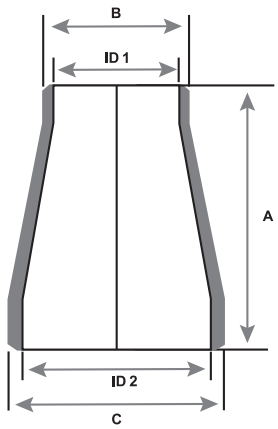





AVAILABLE ALLOYS: (FERROUS) CARBON STEEL (A105)
& STAINLESS STEEL (GRADES 304 / 316 / 321 / 347)
(NON-FERROUS) CUNI (90/10), NICU (MONEL), ALUMINUM (5086)
Additional materials available upon request.

NOMINAL PIPE SIZE	SMI P/N	A	LARGE DIAMETER			SMALL DIAMETER		
			C (OD 2)	ID 2	WALL THICKNESS	B (OD 1)	ID 1	WALL THICKNESS
3/4 x 1/2"	CRXBW40-150-100	1.50	1.05	0.824	0.113	0.84	0.622	0.109
1 x 1/2"	CRXBW40-200-100	2.00	1.32	1.054	0.133	0.84	0.622	0.109
1 x 3/4"	CRXBW40-200-150	2.00	1.32	1.054	0.133	1.05	0.824	0.113
1 1/4 x 1/2"	CRXBW40-250-100	2.00	1.66	1.380	1.40	0.84	0.622	0.109
1 1/4 x 3/4"	CRXBW40-250-150	2.00	1.66	1.380	0.140	1.05	0.824	0.113
1 1/4 x 1"	CRXBW40-250-200	2.00	1.66	1.380	0.140	1.32	1.054	0.133
1 1/2 x 1/2"	CRXBW40-300-100	2.50	1.90	1.610	0.145	0.84	0.622	0.109
1 1/2 x 3/4"	CRXBW40-300-150	2.50	1.90	1.610	0.145	1.05	0.824	0.113
1 1/2 x 1"	CRXBW40-300-200	2.50	1.90	1.610	0.145	1.32	1.054	0.133
1 1/2 x 1 1/4"	CRXBW40-300-250	2.50	1.90	1.610	0.145	1.66	1.380	0.140
2 x 3/4"	CRXBW40-400-150	3.00	2.38	2.072	0.154	1.05	0.824	0.113
2 x 1"	CRXBW40-400-200	3.00	2.38	2.072	0.154	1.32	1.054	0.133
2 x 1 1/4"	CRXBW40-400-250	3.00	2.38	2.072	0.154	1.66	1.380	0.140
2 x 1 1/2"	CRXBW40-400-300	3.00	2.38	2.072	0.154	1.90	1.610	0.145
2 1/2 x 1"	CRXBW40-450-200	3.50	2.88	2.474	0.203	1.32	1.054	0.133
2 1/2 x 1 1/4"	CRXBW40-450-250	3.50	2.88	2.474	0.203	1.66	1.380	0.140
2 1/2 x 1 1/2"	CRXBW40-450-300	3.50	2.88	2.474	0.203	1.90	1.610	0.145
2 1/2 x 2"	CRXBW40-450-400	3.50	2.88	2.474	0.203	2.38	2.072	0.154
3 x 1"	CRXBW40-500-200	3.50	3.50	3.068	0.216	1.32	1.054	0.133
3 x 1 1/4"	CRXBW40-500-250	3.50	3.50	3.068	0.216	1.66	1.380	0.140
3 x 1 1/2"	CRXBW40-500-300	3.50	3.50	3.068	0.216	1.90	1.610	0.145
3 x 2"	CRXBW40-500-400	3.50	3.50	3.068	0.216	2.38	2.072	0.154

NOTES: Sizes not shown may be available upon request.

For P/N's replace X with the following codes:

*Stainless Steel 304 - **304***
*Stainless Steel 316 - **316***
*Stainless Steel 321 - **321***
*Stainless Steel 347 - **347***
*Carbon Steel - **CS***
*Nicu (Monel) - **M***
*Aluminum Gr. 5086 - **A***
*Cuni 90/10 - **9***

SUNFLEX
METALLOY PVT. LTD.
AN ISO 9001:2015 CERTIFIED CO.

CONCENTRIC REDUCER

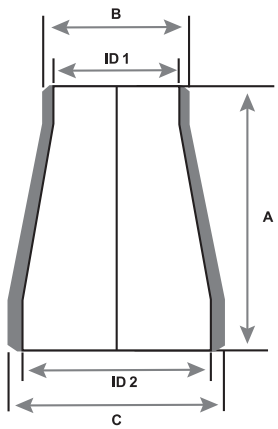

AVAILABLE ALLOYS: (FERROUS) CARBON STEEL (A105)
& STAINLESS STEEL (GRADES 304 / 316 / 321 / 347)
(NON-FERROUS) CUNI (90/10), NICU (MONEL), ALUMINUM (5086)
Additional materials available upon request.

NOMINAL PIPE SIZE	SMI P/N	A	LARGE DIAMETER			SMALL DIAMETER		
			C (OD 2)	ID 2	WALL THICKNESS	B (OD 1)	ID 1	WALL THICKNESS
8 x 3"	CRXBW40-900-500	6.00	8.62	7.976	0.322	3.50	3.068	0.216
8 x 3 1/2"	CRXBW40-900-550	6.00	8.62	7.976	0.322	4.00	3.548	0.226
8 x 4"	CRXBW40-900-600	6.00	8.62	7.976	0.322	4.50	4.026	0.237
8 x 5"	CRXBW40-900-700	6.00	8.62	7.976	0.322	5.56	5.044	0.258
8 x 6"	CRXBW40-900-800	6.00	8.62	7.976	0.322	6.62	6.060	0.280
10 x 4"	CRXBW40-1000-600	7.00	10.75	10.020	0.365	4.50	4.026	0.237
10 x 5"	CRXBW40-1000-700	7.00	10.75	10.020	0.365	5.56	5.044	0.258
10 x 6"	CRXBW40-1000-800	7.00	10.75	10.020	0.365	6.62	6.060	0.280
10 x 8"	CRXBW40-1000-900	7.00	10.75	10.020	0.365	8.62	7.976	0.322
12 x 4"	CRXBW40-1100-600	8.00	12.75	11.938	0.406	4.50	4.026	0.237
12 x 5"	CRXBW40-1100-700	8.00	12.75	11.938	0.406	5.56	5.044	0.258
12 x 6"	CRXBW40-1100-800	8.00	12.75	11.938	0.406	6.62	6.060	0.280
12 x 8"	CRXBW40-1100-900	8.00	12.75	11.938	0.406	8.62	7.976	0.322
12 x 10"	CRXBW40-1100-1000	8.00	12.75	11.938	0.406	10.75	10.020	0.365
14 x 6"	CRXBW40-1200-800	13.00	14.00	13.124	0.438	6.62	6.060	0.280
14 x 8"	CRXBW40-1200-900	13.00	14.00	13.124	0.438	8.62	7.976	0.322
14 x 10"	CRXBW40-1200-1000	13.00	14.00	13.124	0.438	10.75	10.020	0.365
14 x 12"	CRXBW40-1200-1100	13.00	14.00	13.124	0.438	12.75	11.938	0.406
16 x 6"	CRXBW40-1300-800	14.00	16.00	15.000	0.500	6.62	6.060	0.280
16 x 8"	CRXBW40-1300-900	14.00	16.00	15.000	0.500	8.62	7.976	0.322
16 x 10"	CRXBW40-1300-1000	14.00	16.00	15.000	0.500	10.75	10.020	0.365
16 x 12"	CRXBW40-1300-1100	14.00	16.00	15.000	0.500	12.75	11.938	0.406
16 x 14"	CRXBW40-1300-1200	14.00	16.00	15.000	0.500	14.00	13.124	0.438





NOTES: Sizes not shown may be available upon request.

For P/N's replace X with the following codes:

*Stainless Steel 304 - **304***
*Stainless Steel 316 - **316***
*Stainless Steel 321 - **321***
*Stainless Steel 347 - **347***
*Carbon Steel - **CS***
*Nicu (Monel) - **M***
*Aluminum Gr. 5086 - **A***
*Cuni 90/10 - **9***

SUNFLEX
METALLOY PVT. LTD.
AN ISO 9001:2015 CERTIFIED CO.

SUNFLEX
METALLOY PVT. LTD.
AN ISO 9001:2015 CERTIFIED CO.

90° ELBOW LONG RADIUS BUTT WELD

Specifcation: ASME B16.9

Pressure Rating: SCHEDULE 40

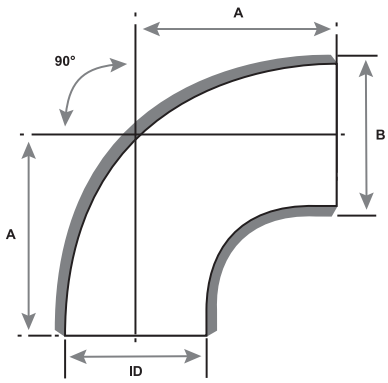





AVAILABLE ALLOYS:
(FERROUS) CARBON STEEL (A105) & STAINLESS STEEL (GRADES 304 / 316 / 321 / 347)
(NON-FERROUS) CUNI (90/10), NICU (MONEL), ALUMINUM (5086)
Additional materials available upon request.

NOMINAL PIPE SIZE	SMI P/N	A	B (OD)	ID	WALL THICKNESS
1/2"	9LXBW40-100	1.50	0.84	0.622	0.109
3/4"	9LXBW40-150	1.50	1.05	0.824	0.113
1"	9LXBW40-200	1.50	1.32	1.054	0.133
1 1/4"	9LXBW40-250	1.88	1.66	1.380	0.140
1 1/2"	9LXBW40-300	2.25	1.90	1.610	0.145
2"	9LXBW40-400	3.00	2.38	2.072	0.154
2 1/2"	9LXBW40-450	3.75	2.88	2.474	0.203
3"	9LXBW40-500	4.50	3.50	3.068	0.216
3 1/2"	9LXBW40-550	5.25	4.00	3.548	0.226
4"	9LXBW40-600	6.00	4.50	4.026	0.237
5"	9LXBW40-700	7.50	5.56	5.044	0.258
6"	9LXBW40-800	9.00	6.62	6.060	0.280
8"	9LXBW40-900	12.00	8.62	7.976	0.322
10"	9LXBW40-1000	15.00	10.75	10.020	0.365
12"	9LXBW40-1100	18.00	12.75	11.938	0.406
14"	9LXBW40-1200	21.00	14.00	13.124	0.438
16"	9LXBW40-1300	24.00	16.00	15.000	0.500

NOTES: Sizes not shown may be available upon request.

For P/N's replace X with the following codes:

*Stainless Steel 304 - **304***
*Stainless Steel 316 - **316***
*Stainless Steel 321 - **321***
*Stainless Steel 347 - **347***
*Carbon Steel - **CS***
*Nicu (Monel) - **M***
*Aluminum Gr. 5086 - **A***
*Cuni 90/10 - **9***

SUNFLEX
METALLOY PVT. LTD.
AN ISO 9001:2015 CERTIFIED CO.

SUNFLEX
METALLOY PVT. LTD.
AN ISO 9001:2015 CERTIFIED CO.

SHORT RADIUS RETURN BEND

BUTT WELD

Specifcation: ASME B16.9

Pressure Rating: SCHEDULE 40

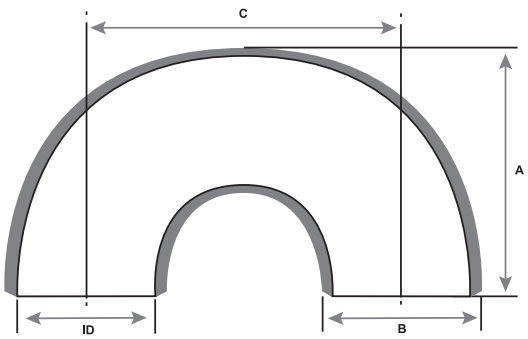



AVAILABLE ALLOYS:
(FERROUS) CARBON STEEL (A105) & STAINLESS STEEL (GRADES 304 / 316 / 321 / 347)
(NON-FERROUS) CUNI (90/10), NICU (MONEL), ALUMINUM (5086)
Additional materials available upon request.

NOMINAL PIPE SIZE	SMI P/N	A	B (OD)	ID	C	WALL THICKNESS
1"	SRBXBW40-200	1.62	1.32	1.054	2.00	0.133
1 1/4"	SRBXBW40-250	2.06	1.66	1.380	2.50	0.140
1 1/2"	SRBXBW40-300	2.44	1.90	1.610	3.00	0.145
2"	SRBXBW40-400	3.19	2.38	2.072	4.00	0.154
2 1/2"	SRBXBW40-450	3.94	2.88	2.474	5.00	0.203
3"	SRBXBW40-500	4.75	3.50	3.068	6.00	0.216
3 1/2"	SRBXBW40-550	5.50	4.00	3.548	7.00	0.226
4"	SRBXBW40-600	6.25	4.50	4.026	8.00	0.237
5"	SRBXBW40-700	7.75	5.56	5.044	10.00	0.258
6"	SRBXBW40-800	9.31	6.62	6.060	12.00	0.280
8"	SRBXBW40-900	12.31	8.62	7.976	16.00	0.322
10"	SRBXBW40-1000	15.38	10.75	10.020	20.00	0.365
12"	SRBXBW40-1100	18.38	12.75	11.938	24.00	0.406
14"	SRBXBW40-1200	21.00	14.00	13.124	28.00	0.438
16"	SRBXBW40-1300	24.00	16.00	15.000	32.00	0.500

NOTES: Sizes not shown may be available upon request.

For P/N's replace X with the following codes:

*Stainless Steel 304 - **304***
*Stainless Steel 316 - **316***
*Stainless Steel 321 - **321***
*Stainless Steel 347 - **347***
*Carbon Steel - **CS***
*Nicu (Monel) - **M***
*Aluminum Gr. 5086 - **A***
*Cuni 90/10 - **9***

SUNFLEX
METALLOY PVT. LTD.
AN ISO 9001:2015 CERTIFIED CO.

90° ELBOW SHORT RADIUS BUTT WELD

Specifcation: ASME B16.9
Pressure Rating: SCHEDULE 40

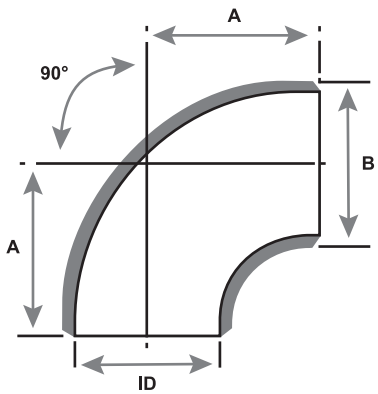





AVAILABLE ALLOYS:
(FERROUS) CARBON STEEL (A105) & STAINLESS STEEL (GRADES 304 / 316 / 321 / 347)
(NON-FERROUS) CUNI (90/10), NICU (MONEL), ALUMINUM (5086)
Additional materials available upon request.

NOMINAL PIPE SIZE	SMI P/N	A	B (OD)	ID	WALL THICKNESS
1"	9SXBW40-200	1.00	1.32	1.054	0.133
1 1/4"	9SXBW40-250	1.25	1.66	1.380	0.140
1 1/2"	9SXBW40-300	1.50	1.90	1.610	0.145
2"	9SXBW40-400	2.00	2.38	2.072	0.154
2 1/2"	9SXBW40-450	2.50	2.88	2.474	0.203
3"	9SXBW40-500	3.00	3.50	3.068	0.216
3 1/2"	9SXBW40-550	3.50	4.00	3.548	0.226
4"	9SXBW40-600	4.00	4.50	4.026	0.237
5"	9SXBW40-700	5.00	5.56	5.044	0.258
6"	9SXBW40-800	6.00	6.62	6.060	0.280
8"	9SXBW40-900	8.00	8.62	7.976	0.322
10"	9SXBW40-1000	10.00	10.75	10.020	0.365
12"	9SXBW40-1100	12.00	12.75	11.938	0.406
14"	9SXBW40-1200	14.00	14.00	13.124	0.438
16"	9SXBW40-1300	16.00	16.00	15.000	0.500

NOTES: Sizes not shown may be available upon request.

For P/N's replace X with the following codes:

*Stainless Steel 304 - **304***
*Stainless Steel 316 - **316***
*Stainless Steel 321 - **321***
*Stainless Steel 347 - **347***
*Carbon Steel - **CS***
*Nicu (Monel) - **M***
*Aluminum Gr. 5086 - **A***
*Cuni 90/10 - **9***

SUNFLEX
METALLOY PVT. LTD.
AN ISO 9001:2015 CERTIFIED CO.

SUNFLEX
METALLOY PVT. LTD.
AN ISO 9001:2015 CERTIFIED CO.

TEE
BUTT WELD

Specifcation: ASME B16.9
Pressure Rating: SCHEDULE 40

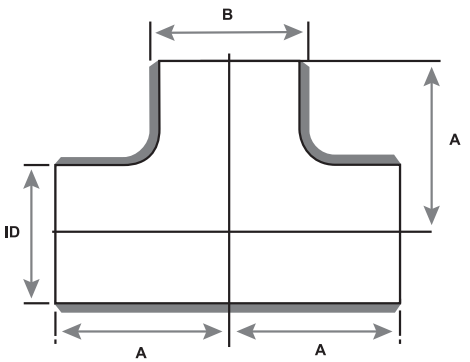





AVAILABLE ALLOYS:
(FERROUS) CARBON STEEL (A105) & STAINLESS STEEL (GRADES 304 / 316 / 321 / 347)
(NON-FERROUS) CUNI (90/10), NICU (MONEL), ALUMINUM (5086)
Additional materials available upon request.

NOMINAL PIPE SIZE	SMI P/N	A	B (OD)	ID	WALL THICKNESS
1/2"	TXBW40-100	1.00	0.84	0.622	0.109
3/4"	TXBW40-150	1.12	1.05	0.824	0.113
1"	TXBW40-200	1.50	1.32	1.054	0.133
1 1/4"	TXBW40-250	1.88	1.66	1.380	0.140
1 1/2"	TXBW40-300	2.25	1.90	1.610	0.145
2"	TXBW40-400	2.50	2.38	2.072	0.154
2 1/2"	TXBW40-450	3.00	2.88	2.474	0.203
3"	TXBW40-500	3.38	3.50	3.068	0.216
3 1/2"	TXBW40-550	3.75	4.00	3.548	0.226
4"	TXBW40-600	4.12	4.50	4.026	0.237
5"	TXBW40-700	4.88	5.56	5.044	0.258
6"	TXBW40-800	5.62	6.62	6.060	0.280
8"	TXBW40-900	7.00	8.62	7.976	0.322
10"	TXBW40-1000	8.50	10.75	10.020	0.365
12"	TXBW40-1100	10.00	12.75	11.938	0.406
14"	TXBW40-1200	11.00	14.00	13.124	0.438
16"	TXBW40-1300	12.00	16.00	15.000	0.500

NOTES: Sizes not shown may be available upon request.

For P/N's replace X with the following codes:

*Stainless Steel 304 - **304***
*Stainless Steel 316 - **316***
*Stainless Steel 321 - **321***
*Stainless Steel 347 - **347***
*Carbon Steel - **CS***
*Nicu (Monel) - **M***
*Aluminum Gr. 5086 - **A***
*Cuni 90/10 - **9***

SUNFLEX
METALLOY PVT. LTD.
AN ISO 9001:2015 CERTIFIED CO.

SUNFLEX
METALLOY PVT. LTD.
AN ISO 9001:2015 CERTIFIED CO.

45° ELBOW
BUTT WELD

Specifcation: ASME B16.9
Pressure Rating: SCHEDULE 80

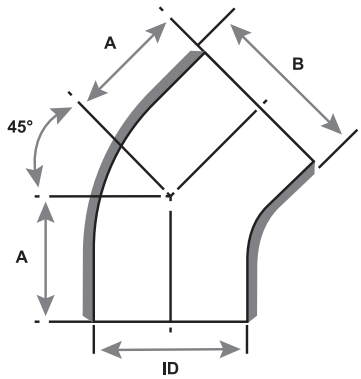





AVAILABLE ALLOYS:
(FERROUS) CARBON STEEL (A105) & STAINLESS STEEL (GRADES 304 / 316 / 321 / 347)
(NON-FERROUS) CUNI (90/10), NICU (MONEL), ALUMINUM (5086)
Additional materials available upon request.

NOMINAL PIPE SIZE	SMI P/N	A	B (OD)	ID	WALL THICKNESS
1/2"	4XBW80-100	0.62	0.84	0.546	0.147
3/4"	4XBW80-150	0.75	1.05	0.742	0.154
1"	4XBW80-200	0.88	1.32	0.962	0.179
1 1/4"	4XBW80-250	1.00	1.66	1.278	0.191
1 1/2"	4XBW80-300	1.12	1.90	1.500	0.200
2"	4XBW80-400	1.38	2.38	1.944	0.218
2 1/2"	4XBW80-450	1.75	2.88	2.328	0.276
3"	4XBW80-500	2.00	3.50	2.900	0.300
3 1/2"	4XBW80-550	2.25	4.00	3.364	0.318
4"	4XBW80-600	2.50	4.50	3.826	0.337
5"	4XBW80-700	3.12	5.56	4.810	0.375
6"	4XBW80-800	3.75	6.62	5.756	0.432
8"	4XBW80-900	5.00	8.62	7.620	0.500
10"	4XBW80-1000	6.25	10.75	9.562	0.594
12"	4XBW80-1100	7.50	12.75	11.374	0.688
14"	4XBW80-1200	8.75	14.00	12.500	0.750
16"	4XBW80-1300	10.00	16.00	14.312	0.844

NOTES: Sizes not shown may be available upon request.

For P/N's replace X with the following codes:

*Stainless Steel 304 - **304***
*Stainless Steel 316 - **316***
*Stainless Steel 321 - **321***
*Stainless Steel 347 - **347***
*Carbon Steel - **CS***
*Nicu (Monel) - **M***
*Aluminum Gr. 5086 - **A***
*Cuni 90/10 - **9***

SUNFLEX
METALLOY PVT. LTD.
AN ISO 9001:2015 CERTIFIED CO.

SUNFLEX
METALLOY PVT. LTD.
AN ISO 9001:2015 CERTIFIED CO.

CAP
BUTT WELD

Specifcation: ASME B16.9
Pressure Rating: SCHEDULE 80

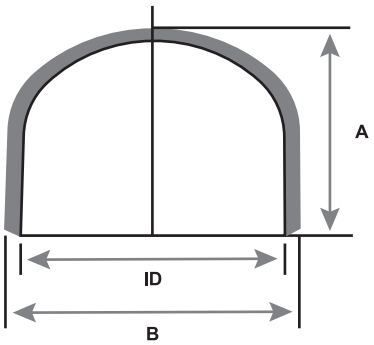





AVAILABLE ALLOYS:
(FERROUS) CARBON STEEL (A105) & STAINLESS STEEL (GRADES 304 / 316 / 321 / 347)
(NON-FERROUS) CUNI (90/10), NICU (MONEL), ALUMINUM (5086)
Additional materials available upon request.

NOMINAL PIPE SIZE	SMI P/N	A	B (OD)	ID	WALL THICKNESS
1/2"	CAXBW80-100	1.00	0.84	0.546	0.147
3/4"	CAXBW80-150	1.00	1.05	0.742	0.154
1"	CAXBW80-200	1.50	1.32	0.962	0.179
1 1/4"	CAXBW80-250	1.50	1.66	1.278	0.191
1 1/2"	CAXBW80-300	1.50	1.90	1.500	0.200
2"	CAXBW80-400	1.50	2.38	1.944	0.218
2 1/2"	CAXBW80-450	1.50	2.88	2.328	0.276
3"	CAXBW80-500	2.00	3.50	2.900	0.300
3 1/2"	CAXBW80-550	2.50	4.00	3.364	0.318
4"	CAXBW80-600	2.50	4.50	3.826	0.337
5"	CAXBW80-700	3.00	5.56	4.810	0.375
6"	CAXBW80-800	3.50	6.62	5.756	0.432
8"	CAXBW80-900	4.00	8.62	7.620	0.500
10"	CAXBW80-1000	6.00	10.75	9.562	0.594
12"	CAXBW80-1100	7.00	12.75	11.374	0.688
14"	CAXBW80-1200	7.50	14.00	12.500	0.750
16"	CAXBW80-1300	8.00	16.00	14.312	0.844

NOTES: Sizes not shown may be available upon request.

For P/N's replace X with the following codes:

*Stainless Steel 304 - **304***
*Stainless Steel 316 - **316***
*Stainless Steel 321 - **321***
*Stainless Steel 347 - **347***
*Carbon Steel - **CS***
*Nicu (Monel) - **M***
*Aluminum Gr. 5086 - **A***
*Cuni 90/10 - **9***

SUNFLEX
METALLOY PVT. LTD.
AN ISO 9001:2015 CERTIFIED CO.

SUNFLEX
METALLOY PVT. LTD.
AN ISO 9001:2015 CERTIFIED CO.

CONCENTRIC REDUCER

BUTT WELD

Specifcation: ASME B16.9
Pressure Rating: SCHEDULE 80

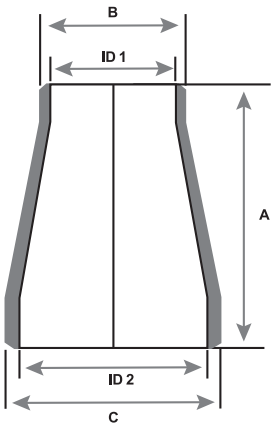

AVAILABLE ALLOYS: (FERROUS) CARBON STEEL (A105)
& STAINLESS STEEL (GRADES 304 / 316 / 321 / 347)
(NON-FERROUS) CUNI (90/10), NICU (MONEL), ALUMINUM (5086)
Additional materials available upon request.

NOMINAL PIPE SIZE	SMI P/N	A	LARGE DIAMETER			SMALL DIAMETER		
			C (OD 2)	ID 2	WALL THICKNESS	B (OD 1)	ID 1	WALL THICKNESS
3/4 x 1/2"	CRXBW80-150-100	1.50	1.05	0.742	0.154	0.84	0.546	0.147
1 x 1/2"	CRXBW80-200-100	2.00	1.32	0.962	0.179	0.84	0.546	0.147
1 x 3/4"	CRXBW80-200-150	2.00	1.32	0.962	0.179	1.05	0.742	0.154
1 1/4 x 1/2"	CRXBW80-250-100	2.00	1.66	1.278	0.191	0.84	0.546	0.147
1 1/4 x 3/4"	CRXBW80-250-150	2.00	1.66	1.278	0.191	1.05	0.742	0.154
1 1/4 x 1"	CRXBW80-250-200	2.00	1.66	1.278	0.191	1.32	0.962	0.179
1 1/2 x 1/2"	CRXBW80-300-100	2.50	1.90	1.500	0.200	0.84	0.546	0.147
1 1/2 x 3/4"	CRXBW80-300-150	2.50	1.90	1.500	0.200	1.05	0.742	0.154
1 1/2 x 1"	CRXBW80-300-200	2.50	1.90	1.500	0.200	1.32	0.962	0.179
1 1/2 x 1 1/4"	CRXBW80-300-250	2.50	1.90	1.500	0.200	1.66	1.278	0.191
2 x 3/4"	CRXBW80-400-150	3.00	2.38	1.944	0.218	1.05	0.742	0.154
2 x 1"	CRXBW80-400-200	3.00	2.38	1.944	0.218	1.32	0.962	0.179
2 x 1 1/4"	CRXBW80-400-250	3.00	2.38	1.944	0.218	1.66	1.278	0.191
2 x 1 1/2"	CRXBW80-400-300	3.00	2.38	1.944	0.218	1.90	1.500	0.200
2 1/2 x 1"	CRXBW80-450-200	3.50	2.88	2.328	0.276	1.32	0.962	0.179
2 1/2 x 1 1/4"	CRXBW80-450-250	3.50	2.88	2.328	0.276	1.66	1.278	0.191
2 1/2 x 1 1/2"	CRXBW80-450-300	3.50	2.88	2.328	0.276	1.90	1.500	0.200
2 1/2 x 2"	CRXBW80-450-400	3.50	2.88	2.328	0.276	2.38	1.944	0.218
3 x 1"	CRXBW80-500-200	3.50	3.50	2.900	0.300	1.32	0.962	0.179
3 x 1 1/4"	CRXBW80-500-250	3.50	3.50	2.900	0.300	1.66	1.278	0.191
3 x 1 1/2"	CRXBW80-500-300	3.50	3.50	2.900	0.300	1.90	1.500	0.200
3 x 2"	CRXBW80-500-400	3.50	3.50	2.900	0.300	2.38	1.944	0.218





NOTES: Sizes not shown may be available upon request.

For P/N's replace X with the following codes:

*Stainless Steel 304 - **304***
*Stainless Steel 316 - **316***
*Stainless Steel 321 - **321***
*Stainless Steel 347 - **347***
*Carbon Steel - **CS***
*Nicu (Monel) - **M***
*Aluminum Gr. 5086 - **A***
*Cuni 90/10 - **9***

SUNFLEX
METALLOY PVT. LTD.
AN ISO 9001:2015 CERTIFIED CO.

CONCENTRIC REDUCER

BUTT WELD

Specifcation: ASME B16.9
Pressure Rating: SCHEDULE 80

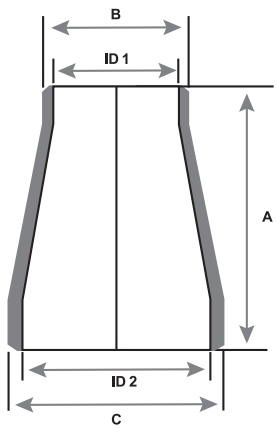

AVAILABLE ALLOYS: (FERROUS) CARBON STEEL (A105)
& STAINLESS STEEL (GRADES 304 / 316 / 321 / 347)
(NON-FERROUS) CUNI (90/10), NICU (MONEL), ALUMINUM (5086)
Additional materials available upon request.

NOMINAL PIPE SIZE	SMI P/N	A	LARGE DIAMETER			SMALL DIAMETER		
			C (OD 2)	ID 2	WALL THICKNESS	B (OD 1)	ID 1	WALL THICKNESS
3 x 2 1/2"	CRXBW80-500-450	3.50	3.50	2.900	0.300	2.88	2.328	0.276
3 1/2 x 1 1/4"	CRXBW80-550-250	4.00	4.00	3.364	0.318	1.66	1.278	0.191
3 1/2 x 1 1/2"	CRXBW80-550-300	4.00	4.00	3.364	0.318	1.90	1.500	0.200
3 1/2 x 2"	CRXBW80-550-400	4.00	4.00	3.364	0.318	2.38	1.944	0.218
3 1/2 x 2 1/2"	CRXBW80-550-450	4.00	4.00	3.364	0.318	2.88	2.328	0.276
3 1/2 x 3"	CRXBW80-550-450	4.00	4.00	3.364	0.318	3.50	2.900	0.300
4 x 1"	CRXBW80-600-200	4.00	4.50	3.826	0.337	1.32	0.962	0.179
4 x 1 1/4"	CRXBW80-600-250	4.00	4.50	3.826	0.337	1.66	1.278	0.191
4 x 1 1/2"	CRXBW80-600-300	4.00	4.50	3.826	0.337	1.90	1.500	0.200
4 x 2"	CRXBW80-600-400	4.00	4.50	3.826	0.337	2.38	1.944	0.218
4 x 2 1/2"	CRXBW80-600-450	4.00	4.50	3.826	0.337	2.88	2.328	0.276
4 x 3"	CRXBW80-600-500	4.00	4.50	3.826	0.337	3.50	2.900	0.300
4 x 3 1/2"	CRXBW80-600-550	4.00	4.50	3.826	0.337	4.00	3.364	0.318
5 x 2"	CRXBW80-700-400	5.00	5.56	4.810	0.375	2.38	1.944	0.218
5 x 2 1/2"	CRXBW80-700-450	5.00	5.56	4.810	0.375	2.88	2.328	0.276
5 x 3"	CRXBW80-700-500	5.00	5.56	4.810	0.375	3.50	2.900	0.300
5 x 3 1/2"	CRXBW80-700-550	5.00	5.56	4.810	0.375	4.00	3.364	0.318
5 x 4"	CRXBW80-700-600	5.00	5.56	4.810	0.375	4.50	3.826	0.337
6 x 2"	CRXBW80-800-400	5.50	6.62	5.756	0.432	2.38	1.944	0.218
6 x 2 1/2"	CRXBW80-800-450	5.50	6.62	5.756	0.432	2.88	2.328	0.276
6 x 3"	CRXBW80-800-500	5.50	6.62	5.756	0.432	3.50	2.900	0.300
6 x 3 1/2"	CRXBW80-800-550	5.50	6.62	5.756	0.432	4.00	3.364	0.318
6 x 4"	CRXBW80-800-600	5.50	6.62	5.756	0.432	4.50	3.826	0.337





NOTES: Sizes not shown may be available upon request.

For P/N's replace X with the following codes:

*Stainless Steel 304 - **304***
*Stainless Steel 316 - **316***
*Stainless Steel 321 - **321***
*Stainless Steel 347 - **347***
*Carbon Steel - **CS***
*Nicu (Monel) - **M***
*Aluminum Gr. 5086 - **A***
*Cuni 90/10 - **9***

SUNFLEX
METALLOY PVT. LTD.
AN ISO 9001:2015 CERTIFIED CO.

CONCENTRIC REDUCER

BUTT WELD

Specifcation: ASME B16.9
Pressure Rating: SCHEDULE 80

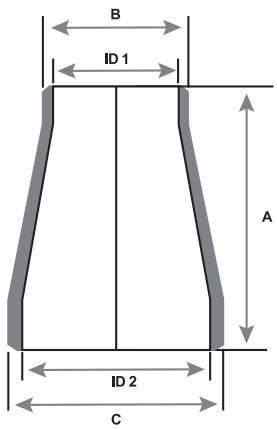

AVAILABLE ALLOYS: (FERROUS) CARBON STEEL (A105)
& STAINLESS STEEL (GRADES 304 / 316 / 321 / 347)
(NON-FERROUS) CUNI (90/10), NICU (MONEL), ALUMINUM (5086)
Additional materials available upon request.

NOMINAL PIPE SIZE	SMI P/N	A	LARGE DIAMETER			SMALL DIAMETER		
			C (OD 2)	ID 2	WALL THICKNESS	B (OD 1)	ID 1	WALL THICKNESS
8 x 3"	CRXBW80-900-500	6.00	8.62	7.620	0.500	3.50	2.900	0.300
8 x 3 1/2"	CRXBW80-900-550	6.00	8.62	7.620	0.500	4.00	3.364	0.318
8 x 4"	CRXBW80-900-600	6.00	8.62	7.620	0.500	4.50	3.826	0.337
8 x 5"	CRXBW80-900-700	6.00	8.62	7.620	0.500	5.56	4.810	0.375
8 x 6"	CRXBW80-900-800	6.00	8.62	7.620	0.500	6.62	5.756	0.432
10 x 4"	CRXBW80-1000-600	7.00	10.75	9.562	0.594	4.50	3.826	0.337
10 x 5"	CRXBW80-1000-700	7.00	10.75	9.562	0.594	5.56	4.810	0.375
10 x 6"	CRXBW80-1000-800	7.00	10.75	9.562	0.594	6.62	5.756	0.432
10 x 8"	CRXBW80-1000-900	7.00	10.75	9.562	0.594	8.62	7.620	0.500
12 x 4"	CRXBW80-1100-600	8.00	12.75	11.374	0.688	4.50	3.826	0.337
12 x 5"	CRXBW80-1100-700	8.00	12.75	11.374	0.688	5.56	4.810	0.375
12 x 6"	CRXBW80-1100-800	8.00	12.75	11.374	0.688	6.62	5.756	0.432
12 x 8"	CRXBW80-1100-900	8.00	12.75	11.374	0.688	8.62	7.620	0.500
12 x 10"	CRXBW80-1100-1000	8.00	12.75	11.374	0.688	10.75	9.562	0.594
14 x 6"	CRXBW80-1200-800	13.00	14.00	12.500	0.750	6.62	5.756	0.432
14 x 8"	CRXBW80-1200-900	13.00	14.00	12.500	0.750	8.62	7.620	0.500
14 x 10"	CRXBW80-1200-1000	13.00	14.00	12.500	0.750	10.75	9.562	0.594
14 x 12"	CRXBW80-1200-1100	13.00	14.00	12.500	0.750	12.75	11.374	0.688
16 x 6"	CRXBW80-1300-800	14.00	16.00	14.312	0.844	6.62	5.756	0.432
16 x 8"	CRXBW80-1300-900	14.00	16.00	14.312	0.844	8.62	7.620	0.500
16 x 10"	CRXBW80-1300-1000	14.00	16.00	14.312	0.844	10.75	9.562	0.594
16 x 12"	CRXBW80-1300-1100	14.00	16.00	14.312	0.844	12.75	11.374	0.688
16 x 14"	CRXBW80-1300-1200	14.00	16.00	14.312	0.844	14.00	12.500	0.750





NOTES: Sizes not shown may be available upon request.

For P/N's replace X with the following codes:

*Stainless Steel 304 - **304***
*Stainless Steel 316 - **316***
*Stainless Steel 321 - **321***
*Stainless Steel 347 - **347***
*Carbon Steel - **CS***
*Nicu (Monel) - **M***
*Aluminum Gr. 5086 - **A***
*Cuni 90/10 - **9***

SUNFLEX
METALLOY PVT. LTD.
AN ISO 9001:2015 CERTIFIED CO.

90° ELBOW LONG RADIUS BUTT WELD

Specifcation: ASME B16.9

Pressure Rating: SCHEDULE 80

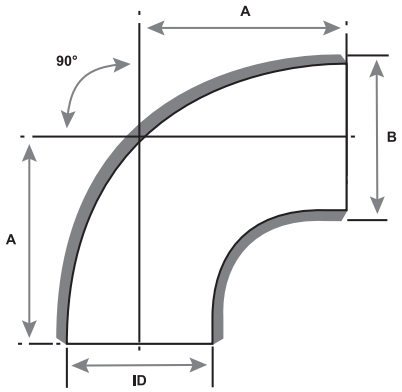





AVAILABLE ALLOYS:
(FERROUS) CARBON STEEL (A105) & STAINLESS STEEL (GRADES 304 / 316 / 321 / 347)
(NON-FERROUS) CUNI (90/10), NICU (MONEL), ALUMINUM (5086)
Additional materials available upon request.

NOMINAL PIPE SIZE	SMI P/N	A	B (OD)	ID	WALL THICKNESS
1/2"	9LXBW80-100	1.50	0.84	0.546	0.147
3/4"	9LXBW80-150	1.50	1.05	0.742	0.154
1"	9LXBW80-200	1.50	1.32	0.962	0.179
1 1/4"	9LXBW80-250	1.88	1.66	1.278	0.191
1 1/2"	9LXBW80-300	2.25	1.90	1.500	0.200
2"	9LXBW80-400	3.00	2.38	1.944	0.218
2 1/2"	9LXBW80-450	3.75	2.88	2.328	0.276
3"	9LXBW80-500	4.50	3.50	2.900	0.300
3 1/2"	9LXBW80-550	5.25	4.00	3.364	0.318
4"	9LXBW80-600	6.00	4.50	3.826	0.337
5"	9LXBW80-700	7.50	5.56	4.810	0.375
6"	9LXBW80-800	9.00	6.62	5.756	0.432
8"	9LXBW80-900	12.00	8.62	7.620	0.500
10"	9LXBW80-1000	15.00	10.75	9.562	0.594
12"	9LXBW80-1100	18.00	12.75	11.374	0.688
14"	9LXBW80-1200	21.00	14.00	12.500	0.750
16"	9LXBW80-1300	24.00	16.00	14.312	0.844

NOTES: Sizes not shown may be available upon request.

For P/N's replace X with the following codes:

*Stainless Steel 304 - **304***
*Stainless Steel 316 - **316***
*Stainless Steel 321 - **321***
*Stainless Steel 347 - **347***
*Carbon Steel - **CS***
*Nicu (Monel) - **M***
*Aluminum Gr. 5086 - **A***
*Cuni 90/10 - **9***

SUNFLEX
METALLOY PVT. LTD.
AN ISO 9001:2015 CERTIFIED CO.

SUNFLEX
METALLOY PVT. LTD.
AN ISO 9001:2015 CERTIFIED CO.

SHORT RADIUS RETURN BEND

BUTT WELD

Specifcation: ASME B16.9

Pressure Rating: SCHEDULE 80

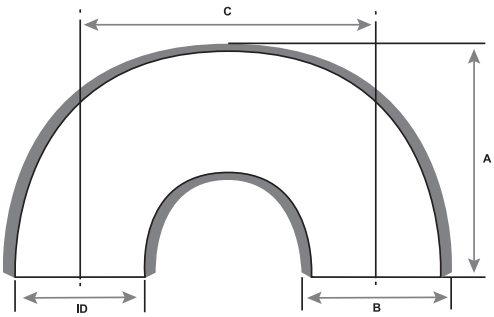



AVAILABLE ALLOYS:
(FERROUS) CARBON STEEL (A105) & STAINLESS STEEL (GRADES 304 / 316 / 321 / 347)
(NON-FERROUS) CUNI (90/10), NICU (MONEL), ALUMINUM (5086)
Additional materials available upon request.

NOMINAL PIPE SIZE	SMI P/N	A	B (OD)	ID	C	WALL THICKNESS
1"	SRBXBW80-200	1.62	1.32	0.962	2.00	0.179
1 1/4"	SRBXBW80-250	2.06	1.66	1.278	2.50	0.191
1 1/2"	SRBXBW80-300	2.44	1.90	1.500	3.00	0.200
2"	SRBXBW80-400	3.19	2.38	1.944	4.00	0.218
2 1/2"	SRBXBW80-450	3.94	2.88	2.328	5.00	0.276
3"	SRBXBW80-500	4.75	3.50	2.900	6.00	0.300
3 1/2"	SRBXBW80-550	5.50	4.00	3.364	7.00	0.318
4"	SRBXBW80-600	6.25	4.50	3.826	8.00	0.337
5"	SRBXBW80-700	7.75	5.56	4.810	10.00	0.375
6"	SRBXBW80-800	9.31	6.62	5.756	12.00	0.432
8"	SRBXBW80-900	12.31	8.62	7.620	16.00	0.500
10"	SRBXBW80-1000	15.38	10.75	9.562	20.00	0.594
12"	SRBXBW80-1100	18.38	12.75	11.374	24.00	0.688
14"	SRBXBW80-1200	21.00	14.00	12.500	28.00	0.750
16"	SRBXBW80-1300	24.00	16.00	14.312	32.00	0.844

NOTES: Sizes not shown may be available upon request.

For P/N's replace X with the following codes:

*Stainless Steel 304 - **304***
*Stainless Steel 316 - **316***
*Stainless Steel 321 - **321***
*Stainless Steel 347 - **347***
*Carbon Steel - **CS***
*Nicu (Monel) - **M***
*Aluminum Gr. 5086 - **A***
*Cuni 90/10 - **9***

SUNFLEX
METALLOY PVT. LTD.
AN ISO 9001:2015 CERTIFIED CO.

SUNFLEX
METALLOY PVT. LTD.
AN ISO 9001:2015 CERTIFIED CO.

90° ELBOW SHORT RADIUS BUTT WELD

Specifcation: ASME B16.9
Pressure Rating: SCHEDULE 80

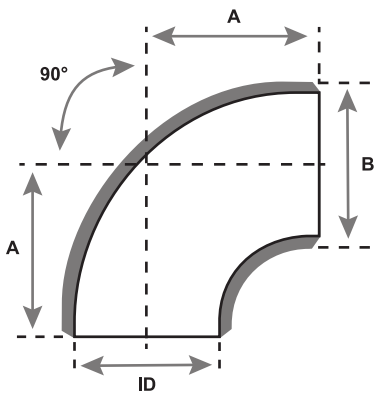





AVAILABLE ALLOYS:
(FERROUS) CARBON STEEL (A105) & STAINLESS STEEL (GRADES 304 / 316 / 321 / 347)
(NON-FERROUS) CUNI (90/10), NICU (MONEL), ALUMINUM (5086)
Additional materials available upon request.

NOMINAL PIPE SIZE	SMI P/N	A	B (OD)	ID	WALL THICKNESS
1"	9SXBW80-200	1.00	1.32	0.962	0.179
1 1/4"	9SXBW80-250	1.25	1.66	1.278	0.191
1 1/2"	9SXBW80-300	1.50	1.90	1.500	0.200
2"	9SXBW80-400	2.00	2.38	1.944	0.218
2 1/2"	9SXBW80-450	2.50	2.88	2.328	0.276
3"	9SXBW80-500	3.00	3.50	2.900	0.300
3 1/2"	9SXBW80-550	3.50	4.00	3.364	0.318
4"	9SXBW80-600	4.00	4.50	3.826	0.337
5"	9SXBW80-700	5.00	5.56	4.810	0.375
6"	9SXBW80-800	6.00	6.62	5.756	0.432
8"	9SXBW80-900	8.00	8.62	7.620	0.500
10"	9SXBW80-1000	10.00	10.75	9.562	0.594
12"	9SXBW80-1100	12.00	12.75	11.374	0.688
14"	9SXBW80-1200	14.00	14.00	12.500	0.750
16"	9SXBW80-1300	16.00	16.00	14.312	0.844

NOTES: Sizes not shown may be available upon request.

For P/N's replace X with the following codes:

*Stainless Steel 304 - **304***
*Stainless Steel 316 - **316***
*Stainless Steel 321 - **321***
*Stainless Steel 347 - **347***
*Carbon Steel - **CS***
*Nicu (Monel) - **M***
*Aluminum Gr. 5086 - **A***
*Cuni 90/10 - **9***

SUNFLEX
METALLOY PVT. LTD.
AN ISO 9001:2015 CERTIFIED CO.

SUNFLEX
METALLOY PVT. LTD.
AN ISO 9001:2015 CERTIFIED CO.

TEE
BUTT WELD

Specifcation: ASME B16.9
Pressure Rating: SCHEDULE 80

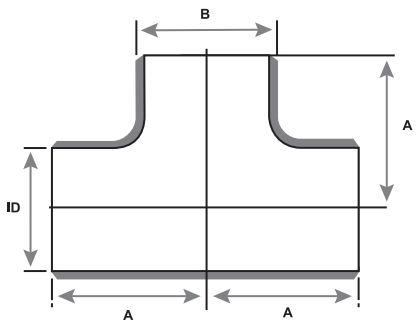





AVAILABLE ALLOYS:
(FERROUS) CARBON STEEL (A105) & STAINLESS STEEL (GRADES 304 / 316 / 321 / 347)
(NON-FERROUS) CUNI (90/10), NICU (MONEL), ALUMINUM (5086)
Additional materials available upon request.

NOMINAL PIPE SIZE	SMI P/N	A	B (OD)	ID	WALL THICKNESS
1/2"	TXBW80-100	1.00	0.84	0.546	0.147
3/4"	TXBW80-150	1.12	1.05	0.742	0.154
1"	TXBW80-200	1.50	1.32	0.962	0.179
1 1/4"	TXBW80-250	1.88	1.66	1.278	0.191
1 1/2"	TXBW80-300	2.25	1.90	1.500	0.200
2"	TXBW80-400	2.50	2.38	1.944	0.218
2 1/2"	TXBW80-450	3.00	2.88	2.328	0.276
3"	TXBW80-500	3.38	3.50	2.900	0.300
3 1/2"	TXBW80-550	3.75	4.00	3.364	0.318
4"	TXBW80-600	4.12	4.50	3.826	0.337
5"	TXBW80-700	4.88	5.56	4.810	0.375
6"	TXBW80-800	5.62	6.62	5.756	0.432
8"	TXBW80-900	7.00	8.62	7.620	0.500
10"	TXBW80-1000	8.50	10.75	9.562	0.594
12"	TXBW80-1100	10.00	12.75	11.374	0.688
14"	TXBW80-1200	11.00	14.00	12.500	0.750
16"	TXBW80-1300	12.00	16.00	14.312	0.844

NOTES: Sizes not shown may be available upon request.

For P/N's replace X with the following codes:

*Stainless Steel 304 - **304***
*Stainless Steel 316 - **316***
*Stainless Steel 321 - **321***
*Stainless Steel 347 - **347***
*Carbon Steel - **CS***
*Nicu (Monel) - **M***
*Aluminum Gr. 5086 - **A***
*Cuni 90/10 - **9***

SUNFLEX
METALLOY PVT. LTD.
AN ISO 9001:2015 CERTIFIED CO.

SUNFLEX
METALLOY PVT. LTD.
AN ISO 9001:2015 CERTIFIED CO.

45° ELBOW

SOCKET WELD

Specifcation: NAVSEA DWG 803-6397430

Pressure Rating: 400 PSIG (WOG)

Intended for use with Class 200 or 700 Copper Nickel Tube IAW MIL-T-16420

SERVICE RATING TABLE				
Nominal Pipe Size (INCHES)	Maximum Working Pressure (LB/IN^2)	Maximum Temperature (°F)	Maximum Working Pressure (LB/IN^2)	Maximum Temperature (°F)
1/4 through 6 Above 6	200 150	425 425	400 250	150 150

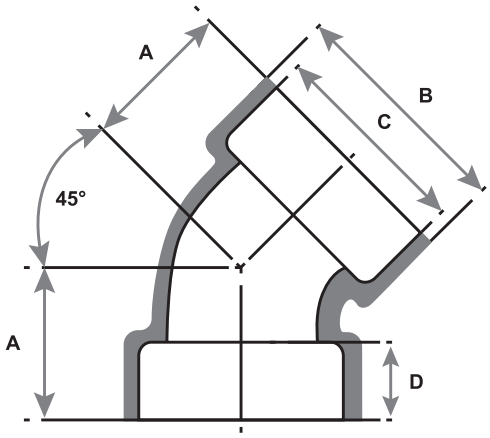



70/30 CUNI
(ALLOY C715/C964)



90/10 CUNI
(ALLOY C706/C962)

AVAILABLE ALLOYS: CUNI 90/10 & CUNI 70/30

NOMINAL PIPE SIZE	1/4"	3/8"	1/2"	3/4"	1"	1 1/4"	1 1/2"	2"	2 1/2"	3"	3 1/2"	4"
SMI P/N (90/10)	49SW040	49SW060	49SW100	49SW150	49SW200	49SW250	49SW300	49SW400	49SW450	49SW500	49SW550	49SW600
SMI P/N (70/30)	47SW040	47SW060	47SW100	47SW150	47SW200	47SW250	47SW300	47SW400	47SW450	47SW500	47SW550	47SW600
A	0.560	0.630	0.780	0.890	1.060	1.220	1.300	1.450	1.950	2.170	2.390	2.610
B	0.945	1.096	1.275	1.503	1.780	2.129	2.387	2.908	3.408	4.041	4.541	5.097
C	.545 (+/- .030)	.680 (+/- .030)	.845 (+/- .030)	1.055 (+/- .030)	1.320 (+/-.030)	1.665 (+/- .030)	1.905 (+/- .030)	2.380 (+/- .046)	2.880 (+/- .051)	3.505 (+/- .055)	4.005 (+/- .055)	4.505 (+/- .060)
D	25/94	5/16	3/8	13/32	7/16	1/2	5/8	23/35	25/32	77/93	7/8	29/32

NOTES: Fittings may be ordered with reduced ends and/or female threads.

SUNFLEX
METALLOY PVT. LTD.
AN ISO 9001:2015 CERTIFIED CO.

SUNFLEX
METALLOY PVT. LTD.
AN ISO 9001:2015 CERTIFIED CO.

FEMALE PIPE THREAD ADAPTER

SOCKET WELD

Specifcation: NAVSEA DWG 803-6397430

Pressure Rating: 400 PSIG (WOG)

Intended for use with Class 200 or 700 Copper Nickel Tube IAW MIL-T-16420

SERVICE RATING TABLE				
Nominal Pipe Size (INCHES)	Maximum Working Pressure (LB/IN^2)	Maximum Temperature (°F)	Maximum Working Pressure (LB/IN^2)	Maximum Temperature (°F)
1/4 through 6	200	425	400	150
Above 6	150	425	250	150

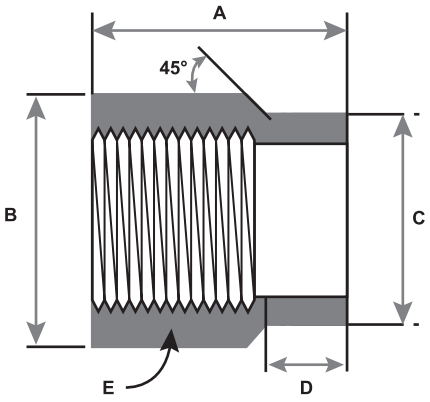



70/30 CUNI
(ALLOY C715/C964)

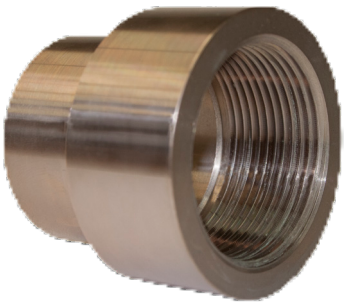

90/10 CUNI
(ALLOY C706/C962)

AVAILABLE ALLOYS: CUNI 90/10 & CUNI 70/30

NOMINAL PIPE SIZE	1/4"	3/8"	1/2"	3/4"	1"	1 1/4"	1 1/2"	2"
SMI P/N (90/10)	A9MSW040	A9MSW060	A9MSW100	A9MSW150	A9MSW200	A9MSW250	A9MSW300	A9MSW400
SMI P/N (70/30)	A7MSW040	A7MSW060	A7MSW100	A7MSW150	A7MSW200	A7MSW250	A7MSW300	A7MSW400
A	1.000	1.380	1.530	1.410	1.560	2.130	2.190	2.380
B	0.900 MIN. - 0.945 MAX.	1.051 MIN. - 1.096 MAX.	1.230 MIN. - 1.275 MAX.	1.458 MIN. - 1.503 MAX.	1.735 MIN. - 1.780 MAX	2.084 MIN. - 2.129 MAX.	2.342 MIN. - 2.387 MAX.	2.863 MIN. - 2.908 MAX.
C	0.540 (+.000 / -.005)	0.675 (+.000 / -.005)	0.840 (+.000 / -.006)	1.050 (+.000 / -.006)	1.315 (+.000 / -.008)	1.660 (+.000 / -.008)	1.900 (+.000 / - .008)	2.375 (+.000 / -.010)
D	0.39 (+ 0.06 / -0.00)	0.44 (+ 0.06 / - 0.00)	0.5 (+ 0.06 / - 0.00)	0.53 (+ 0.06 / - 0.00)	0.56 (+ 0.06 / - 0.00)	0.63 (+ 0.06 / - 0.00)	0.75 (+ 0.06 / - 0.00)	0.78 (+ 0.06 / - 0.00)
E	1/4 X 18	3/8 X 18	1/2 X 14	3/4 X 14	1 X 11.5	1-1/4 X 11.5	1-1/2 X 11.5	2 X 11.5

NOTES: Fittings may be ordered with reduced ends and/or female threads

SUNFLEX
METALLOY PVT. LTD.
AN ISO 9001:2015 CERTIFIED CO.

SUNFLEX
METALLOY PVT. LTD.
AN ISO 9001:2015 CERTIFIED CO.

MALE PIPE THREAD ADAPTER

SOCKET WELD

Specifcation: NAVSEA DWG 803-6397430

Pressure Rating: 400 PSIG (WOG)

Intended for use with Class 200 or 700 Copper Nickel Tube IAW MIL-T-16420

SERVICE RATING TABLE				
Nominal Pipe Size (INCHES)	Maximum Working Pressure (LB/IN^2)	Maximum Temperature (°F)	Maximum Working Pressure (LB/IN^2)	Maximum Temperature (°F)
1/4 through 6	200	425	400	150
Above 6	150	425	250	150

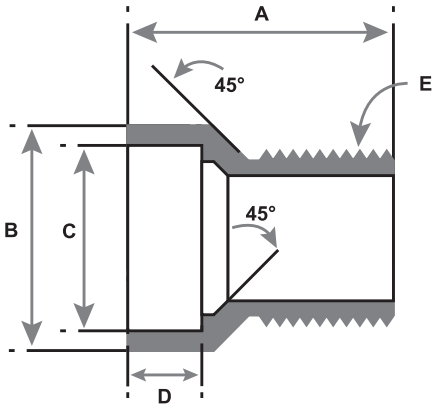



70/30 CUNI (ALLOY C715/C964)

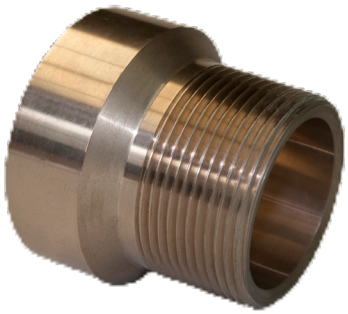

90/10 CUNI (ALLOY C706/C962)

AVAILABLE ALLOYS: CUNI 90/10 & CUNI 70/30

NOMINAL PIPE SIZE	1/4"	3/8"	1/2"	3/4"	1"	1 1/4"	1 1/2"	2"
SMI P/N (90/10)	A9MPT040	A9MPT060	A9MPT100	A9MPT150	A9MPT200	A9MPT250	A9MPT300	A9MPT400
SMI P/N (70/30)	A7MPT040	A7MPT060	A7MPT100	A7MPT150	A7MPT200	A7MPT250	A7MPT300	A7MPT400
A	1.22 (+/- 0.08)	1.3 (+/- 0.10)	1.58 (+/- 0.12)	1.63 (+/- 0.12)	1.9 (+/- 0.14)	1.99 (+/- 0.14)	2.16 (+/- 0.16)	2.25 (+/- 0.16)
B	0.900 MIN. - 0.945 MAX.	1.051 MIN. - 1.096 MAX.	1.230 MIN. - 1.275 MAX.	1.458 MIN. - 1.503 MAX.	1.735 MIN. - 1.78 MAX.	2.084 MIN. - 2.129 MAX.	2.324 MIN. - 2.387 MAX.	2.863 MIN. - 2.908 MAX.
C	.545 (+/- .030)	.680 (+/- .030)	.845 (+/- .030)	1.055 (+/- .030)	1.320 (+/-.030)	1.665 (+/- .030)	1.905 (+/- .030)	2.380 (+/- .046)
D	25/94	5/16	3/8	13/32	7/16	1/2	5/8	23/35
E	1/4 X 18	3/8 X 18	1/2 X 14	3/4 X 14	1 X 11.5	1-1/4 X 11.5	1-1/2 X 11.5	2 X 11.5

NOTES: Fittings may be ordered with reduced ends and/or female threads

SUNFLEX
METALLOY PVT. LTD.
AN ISO 9001:2015 CERTIFIED CO.

SUNFLEX
METALLOY PVT. LTD.
AN ISO 9001:2015 CERTIFIED CO.

BUSHING (INSERT REDUCER)

SOCKET WELD

Specifcation: NAVSEA DWG 803-6397430

Pressure Rating: 400 PSIG (WOG)

Intended for use with Class 200 or 700 Copper Nickel Tube IAW MIL-T-16420

SERVICE RATING TABLE				
Nominal Pipe Size (INCHES)	Maximum Working Pressure (LB/IN²)	Maximum Temperature (°F)	Maximum Working Pressure (LB/IN²)	Maximum Temperature (°F)
1/4 through 6 Above 6	200 150	425 425	400 250	150 150

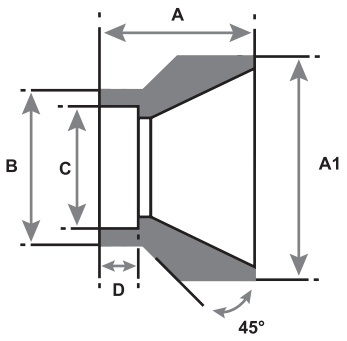





70/30 CUNI
(ALLOY C715/C964)



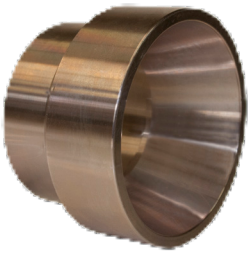

90/10 CUNI
(ALLOY C706/C962)

AVAILABLE ALLOYS: CUNI 90/10 & CUNI 70/30

NOMINAL PIPE SIZE	SMI P/N (90/10)	P/N (70/30)	A	A1	B	C	D
3/8 x 1/4	B9SW060-040	B7SW060-040	0.94	.675 (+/- .005)	1.096	.680 (+/- .030)	5/16
1/2 x 1/4	B9SW100-040	B7SW100-040	1.06	.840 (+/- .006)	1.275	.845 (+/- .030)	3/8
1/2 x 3/8	B9SW100-060	B7SW100-060	1.06	.840 (+/- .006)	1.275	.845 (+/- .030)	3/8
3/4 x 1/4	B9SW150-040	B7SW150-040	1.06	1.050 (+/- .006)	1.503	1.055 (+/- .030)	13/32
3/4 x 3/8	B9SW150-060	B7SW150-060	1.19	1.050 (+/- .006)	1.503	1.055 (+/- .030)	13/32
3/4 x 1/2	B9SW150-100	B7SW150-100	1.19	1.050 (+/- .006)	1.503	1.055 (+/- .030)	13/32
1 x 1/4	B9SW200-040	B7SW200-040	1.23	1.315 (+/- .008)	1.78	1.320 (+/-.030)	7/16
1 x 3/8	B9SW200-060	B7SW200-060	1.18	1.315 (+/- .008)	1.78	1.320 (+/-.030)	7/16
1 x 1/2	B9SW200-100	B7SW200-100	1.16	1.315 (+/- .008)	1.78	1.320 (+/-.030)	7/16
1 x 3/4	B9SW200-150	B7SW200-150	1.25	1.315 (+/- .008)	1.78	1.320 (+/-.030)	7/16
1 1/4 x 1/4	B9SW250-040	B7SW250-040	1.46	1.660 (+/- .008)	2.129	1.665 (+/- .030)	1/2
1 1/4 x 3/8	B9SW250-060	B7SW250-060	1.41	1.660 (+/- .008)	2.129	1.665 (+/- .030)	1/2
1 1/4 x 1/2	B9SW250-100	B7SW250-100	1.4	1.660 (+/- .008)	2.129	1.665 (+/- .030)	1/2
1 1/4 x 3/4	B9SW250-150	B7SW250-150	1.33	1.660 (+/- .008)	2.129	1.665 (+/- .030)	1/2
1 1/4 x 1	B9SW250-200	B7SW250-200	1.44	1.660 (+/- .008)	2.129	1.665 (+/- .030)	1/2
1 1/2 x 1/4	B9SW300-040	B7SW300-040	1.71	1.900 (+/- .008)	2.387	1.905 (+/- .030)	5/8

NOTES: Fittings may be ordered with reduced ends and/or female threads

SUNFLEX
METALLOY PVT. LTD.
AN ISO 9001:2015 CERTIFIED CO.

BUSHING (INSERT REDUCER)

SOCKET WELD

Specifcation: NAVSEA DWG 803-6397430
Pressure Rating: 400 PSIG (WOG)

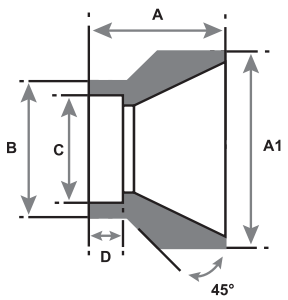



70/30 CUNI
(ALLOY C715/C964)

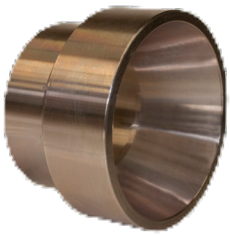

90/10 CUNI
(ALLOY C706/C962)

NOMINAL PIPE SIZE	SMI P/N (90/10)	P/N (70/30)	A	A1	B	C	D
1 1/2 x 3/8	B9SW300-060	B7SW300-060	1.66	1.900 (+/- .008)	2.387	1.905 (+/- .030)	5/8
1 1/2 x 1/2	B9SW300-100	B7SW300-100	1.64	1.900 (+/- .008)	2.387	1.905 (+/- .030)	5/8
1 1/2 x 3/4	B9SW300-150	B7SW300-150	1.58	1.900 (+/- .008)	2.387	1.905 (+/- .030)	5/8
1 1/2 x 1	B9SW300-200	B7SW300-200	1.47	1.900 (+/- .008)	2.387	1.905 (+/- .030)	5/8
1 1/2 x 1 1/4	B9SW300-250	B7SW300-250	1.63	1.900 (+/- .008)	2.387	1.905 (+/- .030)	5/8
2 x 1/4	B9SW400-040	B7SW400-040	1.97	2.375 (+/- .010)	2.908	2.380 (+/- .046)	23/35
2 x 3/8	B9SW400-060	B7SW400-060	1.93	2.375 (+/- .010)	2.908	2.380 (+/- .046)	23/35
2 x 1/2	B9SW400-200	B7SW400-200	1.91	2.375 (+/- .010)	2.908	2.380 (+/- .046)	23/35
2 x 3/4	B9SW400-150	B7SW400-150	1.85	2.375 (+/- .010)	2.908	2.380 (+/- .046)	23/35
2 x 1	B9SW400-200	B7SW400-200	1.74	2.375 (+/- .010)	2.908	2.380 (+/- .046)	23/35
2 x 1 1/4	B9SW400-250	B7SW400-250	1.63	2.375 (+/- .010)	2.908	2.380 (+/- .046)	23/35
2 x 1 1/2	B9SW400-300	B7SW400-300	1.64	2.375 (+/- .010)	2.908	2.380 (+/- .046)	23/35
2 1/2 x 1/2	B9SW450-100	B7SW450-100	2.29	2.875 (+/- .010)	3.408	2.880 (+/- .051)	25/32
2 1/2 x 3/4	B9SW450-150	B7SW450-150	2.22	2.875 (+/- .010)	3.408	2.880 (+/- .051)	25/32
2 1/2 x 1	B9SW450-200	B7SW450-200	2.12	2.875 (+/- .010)	3.408	2.880 (+/- .051)	25/32
2 1/2 x 1 1/4	B9SW450-250	B7SW450-250	2	2.875 (+/- .010)	3.408	2.880 (+/- .051)	25/32
2 1/2 x 1 1/2	B9SW450-300	B7SW450-300	2.01	2.875 (+/- .010)	3.408	2.880 (+/- .051)	25/32
2 1/2 x 2	B9SW450-400	B7SW450-400	1.77	2.875 (+/- .010)	3.408	2.880 (+/- .051)	25/32
3 x 1/2	B9SW500-100	B7SW500-100	2.65	3.500 (+/- .012)	4.041	3.505 (+/- .055)	77/93
3 x 3/4	B9SW500-150	B7SW500-150	2.58	3.500 (+/- .012)	4.041	3.505 (+/- .055)	77/93
3 x 1	B9SW500-200	B7SW500-200	2.48	3.500 (+/- .012)	4.041	3.505 (+/- .055)	77/93
3 x 1 1/4	B9SW500-250	B7SW500-250	2.36	3.500 (+/- .012)	4.041	3.505 (+/- .055)	77/93
3 x 1 1/2	B9SW500-300	B7SW500-300	2.37	3.500 (+/- .012)	4.041	3.505 (+/- .055)	77/93
3 x 2	B9SW500-400	B7SW500-400	2.13	3.500 (+/- .012)	4.041	3.505 (+/- .055)	77/93
3 x 2 1/2	B9SW500-450	B7SW500-450	2.01	3.500 (+/- .012)	4.041	3.505 (+/- .055)	77/93
3 1/2 x 1	B9SW550-200	B7SW550-200	2.77	4.000 (+/- .012)	4.541	4.005 (+/- .055)	7/8
3 1/2 x 1 1/4	B9SW550-250	B7SW550-250	2.66	4.000 (+/- .012)	4.541	4.005 (+/- .055)	7/8
3 1/2 x 1 1/2	B9SW550-300	B7SW550-300	2.67	4.000 (+/- .012)	4.541	4.005 (+/- .055)	7/8
3 1/2 x 2	B9SW550-400	B7SW550-400	2.43	4.000 (+/- .012)	4.541	4.005 (+/- .055)	7/8
3 1/2 x 2 1/2	B9SW550-450	B7SW550-450	2.3	4.000 (+/- .012)	4.541	4.005 (+/- .055)	7/8
3 1/2 x 3	B9SW550-500	B7SW550-500	2.19	4.000 (+/- .012)	4.541	4.005 (+/- .055)	7/8
4 x 3/4	B9SW600-150	B7SW600-150	3.16	4.500 (+/- .015)	5.097	4.505 (+/- .060)	29/32
4 x 1	B9SW600-200	B7SW600-200	3.06	4.500 (+/- .015)	5.097	4.505 (+/- .060)	29/32
4 x 1 1/4	B9SW600-250	B7SW600-250	2.94	4.500 (+/- .015)	5.097	4.505 (+/- .060)	29/32
4 x 1 1/2	B9SW600-300	B7SW600-300	2.95	4.500 (+/- .015)	5.097	4.505 (+/- .060)	29/32
4 x 2	B9SW600-400	B7SW600-400	2.71	4.500 (+/- .015)	5.097	4.505 (+/- .060)	29/32
4 x 2 1/2	B9SW600-450	B7SW600-450	2.58	4.500 (+/- .015)	5.097	4.505 (+/- .060)	29/32
4 x 3	B9SW600-500	B7SW600-500	2.3	4.500 (+/- .015)	5.097	4.505 (+/- .060)	29/32
4 x 3 1/2	B9SW600-550	B7SW600-550	2.25	4.500 (+/- .015)	5.097	4.505 (+/- .060)	29/32

NOTES: Fittings may be ordered with reduced ends and/or female threads

SUNFLEX
METALLOY PVT. LTD.
AN ISO 9001:2015 CERTIFIED CO.

CAP
SOCKET WELD

Specifcation: NAVSEA DWG 803-6397430
Pressure Rating: 400 PSIG (WOG)

Intended for use with Class 200 or 700 Copper Nickel Tube IAW MIL-T-16420

SERVICE RATING TABLE				
Nominal Pipe Size (INCHES)	Maximum Working Pressure (LB/IN²)	Maximum Temperature (°F)	Maximum Working Pressure (LB/IN²)	Maximum Temperature (°F)
1/4 through 6 Above 6	200 150	425 425	400 250	150 150

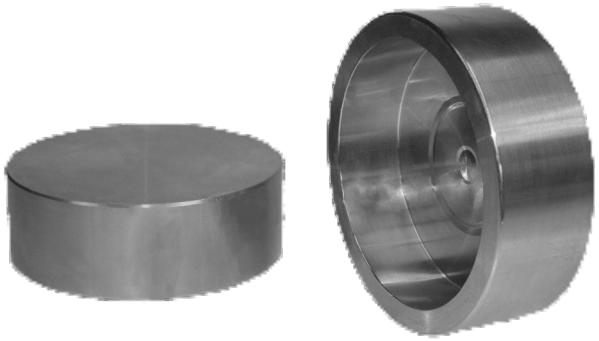

70/30 CUNI
(ALLOY C715/C964)

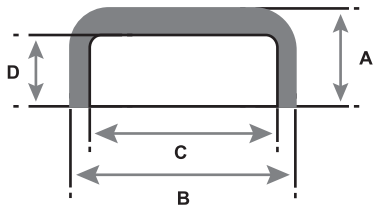

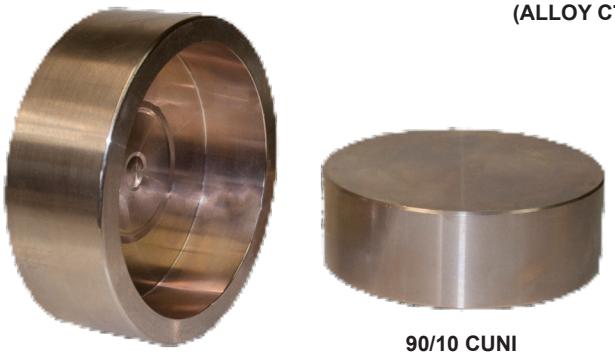

90/10 CUNI
(ALLOY C706/C962)

AVAILABLE ALLOYS: CUNI 90/10 & CUNI 70/30

NOMINAL PIPE SIZE	1/4"	3/8"	1/2"	3/4"	1"	1 1/4"	1 1/2"	2"	2 1/2"	3"	3 1/2"	4"
SMI P/N (90/10)	CA9SW040	CA9SW060	CA9SW100	CA9SW150	CA9SW200	CA9SW250	CA9SW300	CA9SW400	CA9SW450	CA9SW500	CA9SW550	CA9SW600
SMI P/N (70/30)	CA7SW040	CA7SW060	CA7SW100	CA7SW150	CA7SW200	CA7SW250	CA7SW300	CA9SW400	CA7SW450	CA7SW500	CA7SW550	CA7SW600
A	0.380	0.420	0.500	0.540	0.590	0.670	0.820	0.880	1.030	1.120	1.200	1.270
B	0.945	1.096	1.275	1.503	1.780	2.129	2.387	2.908	3.408	4.041	4.541	5.097
C	.545 (+/- .030)	.680 (+/- .030)	.845 (+/- .030)	1.055 (+/- .030)	1.320 (+/-.030)	1.665 (+/- .030)	1.905 (+/- .030)	2.380 (+/- .046)	2.880 (+/- .051)	3.505 (+/- .055)	4.005 (+/- .055)	4.505 (+/- .060)
D	25/94	5/16	3/8	13/32	7/16	1/2	5/8	23/35	25/32	77/93	7/8	29/32

NOTES: Fittings may be ordered with reduced ends and/or female threads.

SUNFLEX
METALLOY PVT. LTD.
AN ISO 9001:2015 CERTIFIED CO.

SUNFLEX
METALLOY PVT. LTD.
AN ISO 9001:2015 CERTIFIED CO.

COUPLING
SOCKET WELD

Specifcation: NAVSEA DWG 803-6397430
Pressure Rating: 400 PSIG (WOG)

Intended for use with Class 200 or 700 Copper Nickel Tube IAW MIL-T-16420

SERVICE RATING TABLE				
Nominal Pipe Size (INCHES)	Maximum Working Pressure (LB/IN²)	Maximum Temperature (°F)	Maximum Working Pressure (LB/IN²)	Maximum Temperature (°F)
1/4 through 6 Above 6	200 150	425 425	400 250	150 150

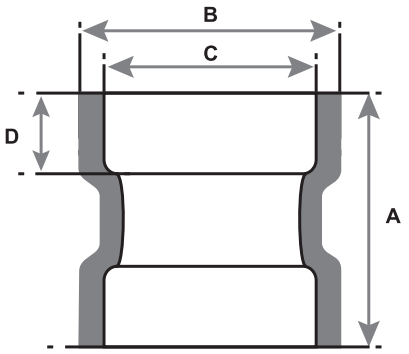



70/30 CUNI
(ALLOY C715/C964)



90/10 CUNI
(ALLOY C706/C962)

AVAILABLE ALLOYS: CUNI 90/10 & CUNI 70/30

NOMINAL PIPE SIZE	1/4"	3/8"	1/2"	3/4"	1"	1 1/4"	1 1/2"	2"	2 1/2"	3"	3 1/2"	4"
SMI P/N (90/10)	CO9SW040	CO9SW060	CO9SW100	CO9SW150	CO9SW200	CO9SW250	CO9SW300	CO9SW400	CO9SW450	CO9SW500	CO9SW550	CO9SW600
SMI P/N (70/30)	CO7SW040	CO7SW060	CO7SW100	CO7SW150	CO7SW200	CO7SW250	CO7SW300	CO7SW400	CO7SW450	CO7SW500	CO7SW550	CO7SW600
A	.97 +/- .08	1.05 +/- .100	1.29 +/- .120	1.43 +/- .120	1.68 +/- .140	1.86 +/- .140	1.92 +/- .160	2.2 +/- .160	2.88 +/- .200	3.18 +/- .200	3.43 +/- .200	3.69 +/- .240
B	0.945	1.096	1.275	1.503	1.780	2.129	2.387	2.908	3.408	4.041	4.541	5.097
C	.545 (+/- .030)	.680 (+/- .030)	.845 (+/- .030)	1.055 (+/- .030)	1.320 (+/-.030)	1.665 (+/- .030)	1.905 (+/- .030)	2.380 (+/- .046)	2.880 (+/- .051)	3.505 (+/- .055)	4.005 (+/- .055)	4.505 (+/- .060)
D	25/94	5/16	3/8	13/32	7/16	1/2	5/8	23/35	25/32	77/93	7/8	29/32

NOTES: Fittings may be ordered with reduced ends and/or female threads.

SUNFLEX
METALLOY PVT. LTD.
AN ISO 9001:2015 CERTIFIED CO.

SUNFLEX
METALLOY PVT. LTD.
AN ISO 9001:2015 CERTIFIED CO.

CROSS

SOCKET WELD

Specifcation: NAVSEA DWG 803-6397430

Pressure Rating: 400 PSIG (WOG)

Intended for use with Class 200 or 700 Copper Nickel Tube IAW MIL-T-16420

SERVICE RATING TABLE

Nominal Pipe Size (INCHES)	Maximum Working Pressure (LB/IN²)	Maximum Temperature (°F)	Maximum Working Pressure (LB/IN²)	Maximum Temperature (°F)
1/4 through 6	200	425	400	150
Above 6	150	425	250	150

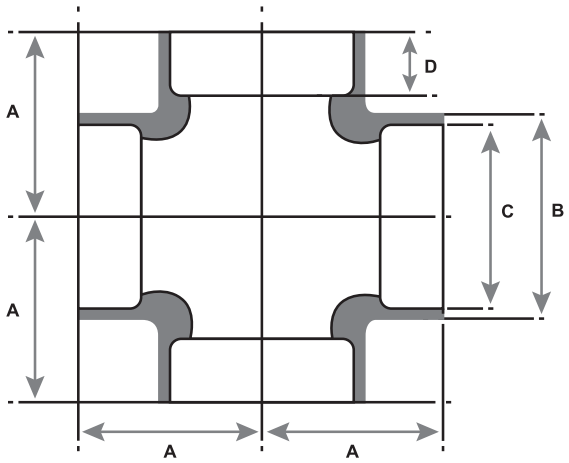



70/30 CUNI (ALLOY C715/C964)



90/10 CUNI (ALLOY C706/C962)

AVAILABLE ALLOYS: CUNI 90/10 & CUNI 70/30

NOMINAL PIPE SIZE	1/4"	3/8"	1/2"	3/4"	1"	1 1/4"	1 1/2"	2"	2 1/2"	3"	3 1/2"	4"
SMI P/N (90/10)	CR9SW040	CR9SW060	CR9SW100	CR9SW150	CR9SW200	CR9SW250	CR9SW300	CR9SW400	CR9SW450	CR9SW500	CR9SW550	CR9SW600
SMI P/N (70/30)	CR7SW040	CR7SW060	CR7SW100	CR7SW150	CR7SW200	CR7SW250	CR7SW300	CR7SW400	CR7SW450	CR7SW500	CR7SW550	CR7SW600
A	0.71	0.82	1.01	1.18	1.43	1.69	1.84	2.12	2.7	3.08	3.42	3.79
B	0.945	1.096	1.275	1.503	1.78	2.129	2.387	2.908	3.408	4.041	4.541	5.097
C	.545 (+/- .030)	.680 (+/- .030)	.845 (+/- .030)	1.055 (+/- .030)	1.320 (+/-.030)	1.665 (+/- .030)	1.905 (+/- .030)	2.380 (+/- .046)	2.880 (+/- .051)	3.505 (+/- .055)	4.005 (+/- .055)	4.505 (+/- .060)
D	25/94	5/16	3/8	13/32	7/16	1/2	5/8	23/35	25/32	77/93	7/8	29/32

NOTES: Fittings may be ordered with reduced ends and/or female threads.

SUNFLEX
METALLOY PVT. LTD.
AN ISO 9001:2015 CERTIFIED CO.

SUNFLEX
METALLOY PVT. LTD.
AN ISO 9001:2015 CERTIFIED CO.

LONG TURN DOUBLE SWEEP TEE

SOCKET WELD

Specifcation: NAVSEA DWG 803-6397430

Pressure Rating: 400 PSIG (WOG)

Intended for use with Class 200 or 700 Copper Nickel Tube IAW MIL-T-16420

SERVICE RATING TABLE				
Nominal Pipe Size (INCHES)	Maximum Working Pressure (LB/IN²)	Maximum Temperature (°F)	Maximum Working Pressure (LB/IN²)	Maximum Temperature (°F)
1/4 through 6 Above 6	200 150	425 425	400 250	150 150

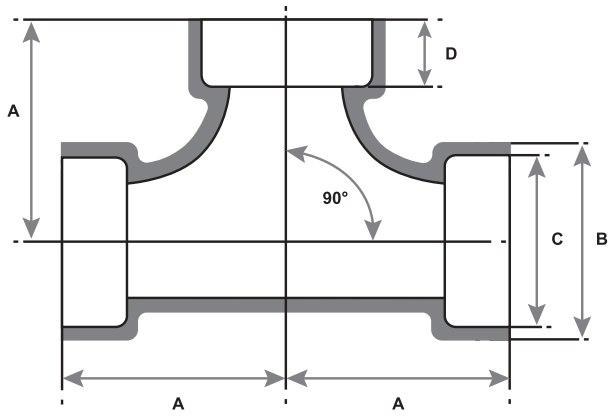



70/30 CUNI
(ALLOY C715/C964)



90/10 CUNI
(ALLOY C706/C962)

AVAILABLE ALLOYS: CUNI 90/10 & CUNI 70/30

NOMINAL PIPE SIZE	1/4"	3/8"	1/2"	3/4"	1"	1 1/4"	1 1/2"	2"	2 1/2"	3"	3 1/2"	4"
SMI P/N (90/10)	DST9SW040	DST9SW060	DST9SW100	DST9SW150	DST9SW200	DST9SW250	DST9SW300	DST9SW400	DST9SW450	DST9SW500	DST9SW550	DST9SW600
SMI P/N (70/30)	DST7SW040	DST7SW060	DST7SW100	DST7SW150	DST7SW200	DST7SW250	DST7SW300	DST9SW400	DST7SW450	DST7SW500	DST7SW550	DST7SW600
A	1.250	1.500	1.750	2.000	2.310	2.750	3.130	3.750	4.500	5.440	6.190	6.940
B	0.945	1.096	1.275	1.503	1.780	2.129	2.387	2.908	3.408	4.041	4.541	5.097
C	.545 (+/- .030)	.680 (+/- .030)	.845 (+/- .030)	1.055 (+/- .030)	1.320 (+/-.030)	1.665 (+/- .030)	1.905 (+/- .030)	2.380 +/- .046	2.880 (+/- .051)	3.505 (+/- .055)	4.005 (+/- .055)	4.505 (+/- .060)
D	25/94	5/16	3/8	13/32	7/16	1/2	5/8	23/35	25/32	77/93	7/8	29/32

NOTES: Fittings may be ordered with reduced ends and/or female threads.

SUNFLEX
METALLOY PVT. LTD.
AN ISO 9001:2015 CERTIFIED CO.

SUNFLEX
METALLOY PVT. LTD.
AN ISO 9001:2015 CERTIFIED CO.

LATERAL
SOCKET WELD

Specifcation: NAVSEA DWG 803-6397430
Pressure Rating: 400 PSIG (WOG)

Intended for use with Class 200 or 700 Copper Nickel Tube IAW MIL-T-16420

SERVICE RATING TABLE				
Nominal Pipe Size (INCHES)	Maximum Working Pressure (LB/IN²)	Maximum Temperature (°F)	Maximum Working Pressure (LB/IN²)	Maximum Temperature (°F)
1/4 through 6	200	425	400	150
Above 6	150	425	250	150

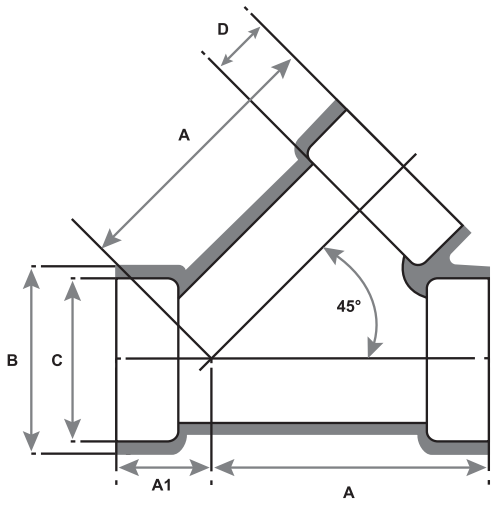



70/30 CUNI
(ALLOY C715/C964)



90/10 CUNI
(ALLOY C706/C962)

AVAILABLE ALLOYS: CUNI 90/10 & CUNI 70/30

NOMINAL PIPE SIZE	1/4"	3/8"	1/2"	3/4"	1"	1 1/4"	1 1/2"	2"	2 1/2"	3"	3 1/2"	4"
SMI P/N (90/10)	L9SW040	L9SW060	L9SW100	L9SW150	L9SW200	L9SW250	L9SW300	L9SW400	L9SW450	L9SW500	L9SW550	L9SW600
SMI P/N (70/30)	L7SW040	L7SW060	L7SW100	L7SW150	L7SW200	L7SW250	L7SW300	L7SW400	L7SW450	L7SW500	L7SW550	L9SW600
A	1.070	1.280	1.580	1.900	2.330	2.830	3.140	3.760	4.730	5.550	6.250	6.970
A1	0.430	0.500	0.610	0.720	0.850	1.020	1.100	1.240	1.520	1.710	1.850	2.010
B	0.945	1.096	1.275	1.503	1.780	2.129	2.387	2.908	3.408	4.041	4.541	5.097
C	.545 (+/- .030)	.680 (+/- .030)	.845 (+/- .030)	1.055 (+/- .030)	1.320 (+/-.030)	1.665 (+/- .030)	1.905 (+/- .030)	2.380 (+/- .046)	2.880 (+/- .051)	3.505 (+/- .055)	4.005 (+/- .055)	4.505 (+/- .060)
D	25/94	5/16	3/8	13/32	7/16	1/2	5/8	23/35	25/32	77/93	7/8	29/32

NOTES: Fittings may be ordered with reduced ends and/or female threads.

SUNFLEX
METALLOY PVT. LTD.
AN ISO 9001:2015 CERTIFIED CO.

SUNFLEX
METALLOY PVT. LTD.
AN ISO 9001:2015 CERTIFIED CO.

PLUG
SOCKET WELD

Specifcation: NAVSEA DWG 803-6397430

Pressure Rating: 400 PSIG (WOG)

Intended for use with Class 200 or 700 Copper Nickel Tube IAW MIL-T-16420

SERVICE RATING TABLE				
Nominal Pipe Size (INCHES)	Maximum Working Pressure (LB/IN²)	Maximum Temperature (°F)	Maximum Working Pressure (LB/IN²)	Maximum Temperature (°F)
1/4 through 6	200	425	400	150
Above 6	150	425	250	150

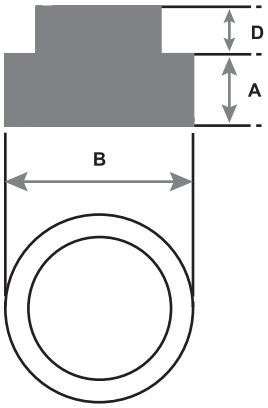



70/30 CUNI (ALLOY C715/C964)





90/10 CUNI (ALLOY C706/C962)



AVAILABLE ALLOYS: CUNI 90/10 & CUNI 70/30

NOMINAL PIPE SIZE	1/4"	3/8"	1/2"	3/4"	1"	1 1/4"	1 1/2"	2"	2 1/2"	3"	3 1/2"	4"
SMI P/N (90/10)	PL9SW040	PL9SW060	PL9SW100	PL9SW150	PL9SW200	PL9SW250	PL9SW300	PL9SW350	PL9SW400	PL9SW450	PL9SW500	PL9SW600
SMI P/N (70/30)	PL7SW040	PL9SW060	PL7SW100	PL7SW150	PL7SW200	PL7SW250	PL7SW300	PL7SW350	PL7SW400	PL7SW450	PL7SW500	PL7SW600
A	0.300 MIN - 0.410 MAX	0.340 MIN - 0.410 MAX	0.410 MIN - 0.540 MAX	0.440 MIN - 0.550 MAX	0.470 MIN - 0.690 MAX	0.530 MIN - 0.710 MAX	0.660 MIN - 0.730 MAX	0.690 MIN - 0.760 MAX	0.840 MIN - 1.070 MAX	0.890 MIN - 1.130 MAX	0.940 MIN - 1.100 MAX	0.970 MIN - 1.220 MAX
B	0.535 MIN - 0.540 MAX	0.670 MIN - 0.675 MAX	0.834 MIN - 0.840 MAX	1.044 MIN - 1.050 MAX	1.307 MIN - 1.315 MAX	1.652 MIN - 1.660 MAX	1.892 MIN - 1.900 MAX	2.365 MIN - 2.375 MAX	2.865 MIN - 8.75 MAX	3.488 MIN - 3.500 MAX	3.988 MIN - 4.000 MAX	4.485 MIN - 4.500 MAX
D	0.28 MIN	0.31 MIN	0.38 MIN	0.44 MIN	0.50 MIN	0.56 MIN	0.62 MIN	0.68 MIN	0.74 MIN	0.80 MIN	0.86 MIN	0.92 MIN

NOTES: Fittings may be ordered with reduced ends and/or female threads

SUNFLEX
METALLOY PVT. LTD.
AN ISO 9001:2015 CERTIFIED CO.

SUNFLEX
METALLOY PVT. LTD.
AN ISO 9001:2015 CERTIFIED CO.

90° ELBOW LONG RADIUS

SOCKET WELD

Specifcation: NAVSEA DWG 803-6397430

Pressure Rating: 400 PSIG (WOG)

Intended for use with Class 200 or 700 Copper Nickel Tube IAW MIL-T-16420

SERVICE RATING TABLE				
Nominal Pipe Size (INCHES)	Maximum Working Pressure (LB/IN²)	Maximum Temperature (°F)	Maximum Working Pressure (LB/IN²)	Maximum Temperature (°F)
1/4 through 6 Above 6	200 150	425 425	400 250	150 150

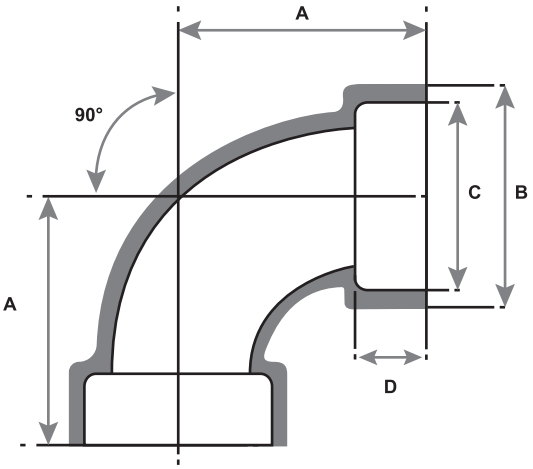



70/30 CUNI
(ALLOY C715/C964)



90/10 CUNI
(ALLOY C706/C962)

AVAILABLE ALLOYS: CUNI 90/10 & CUNI 70/30

NOMINAL PIPE SIZE	1/4"	3/8"	1/2"	3/4"	1"	1 1/4"	1 1/2"	2"	2 1/2"	3"	3 1/2"	4"
SMI P/N (90/10)	9L9SW040	9L9SW060	9L9SW100	9L9SW150	9L9SW200	9L9SW250	9L9SW300	9L9SW400	9L9SW450	9L9SW500	9L9SW550	9L9SW600
SMI P/N (70/30)	9L7SW040	9L7SW060	9L7SW100	9L7SW150	PL7SW200	9L7SW250	9L7SW300	9L7SW400	9L7SW450	9L7SW500	9L7SW550	9L7SW600
A	1.250	1.500	1.750	2.000	2.310	2.750	3.130	3.750	4.500	5.440	6.910	6.940
B	0.945	1.096	1.275	1.503	1.78	2.129	2.387	2.908	3.408	4.041	4.541	5.097
C	.545 (+/- .030)	.680 (+/- .030)	.845 (+/- .030)	1.055 (+/- .030)	1.320 (+/-.030)	1.665 (+/- .030)	1.905 (+/- .030)	2.380 (+/- .046)	2.880 (+/- .051)	3.505 (+/- .055)	4.005 (+/- .055)	4.505 (+/- .060)
D	25/94	5/16	3/8	13/32	7/16	1/2	5/8	23/35	25/32	77/93	7/8	29/32

NOTES: Fittings may be ordered with reduced ends and/or female threads.

SUNFLEX
METALLOY PVT. LTD.
AN ISO 9001:2015 CERTIFIED CO.

SUNFLEX
METALLOY PVT. LTD.
AN ISO 9001:2015 CERTIFIED CO.

RETURN BEND
SOCKET WELD

Specifcation: NAVSEA DWG 803-6397430
Pressure Rating: 400 PSIG (WOG)

Intended for use with Class 200 or 700 Copper Nickel Tube IAW MIL-T-16420

SERVICE RATING TABLE				
Nominal Pipe Size (INCHES)	Maximum Working Pressure (LB/IN²)	Maximum Temperature (°F)	Maximum Working Pressure (LB/IN²)	Maximum Temperature (°F)
1/4 through 6 Above 6	200 150	425 425	400 250	150 150

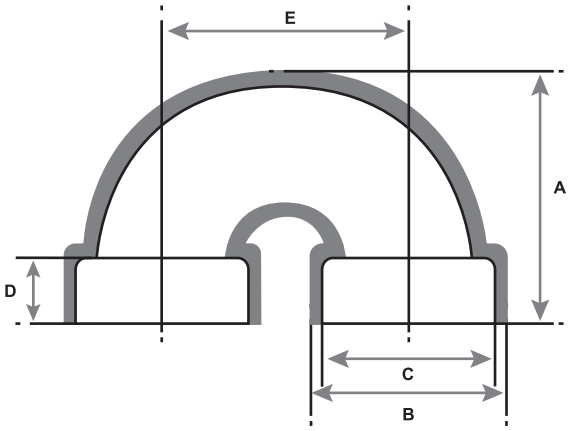



70/30 CUNI
(ALLOY C715/C964)



90/10 CUNI
(ALLOY C706/C962)

AVAILABLE ALLOYS: CUNI 90/10 & CUNI 70/30

NOMINAL PIPE SIZE	1/2"	3/4"	1"	1 1/4"	1 1/2"	2"
SMI P/N (90/10)	RB9SW100	RB9SW150	RB9SW200	RB9SW250	RB9SW300	RB9SW400
SMI P/N (70/30)	RB7SW100	RB7SW150	RB7SW200	RB7SW250	RB7SW300	RB7SW400
A	1.690	2.130	2.630	3.130	3.560	4.190
B	1.275	1.503	1.780	2.129	2.387	2.908
C	.845 (+/- .030)	1.055 (+/- .030)	1.320 (+/-.030)	1.665 (+/- .030)	1.905 (+/- .030)	2.380 (+/- .046)
D	3/8	13/32	7/16	1/2	5/8	23/35
E	1.500	2.000	2.500	3.000	3.500	4.000

NOTES: Fittings may be ordered with reduced ends and/or female threads.

SUNFLEX
METALLOY PVT. LTD.
AN ISO 9001:2015 CERTIFIED CO.

90° ELBOW SHORT RADIUS

SOCKET WELD

Specifcation: NAVSEA DWG 803-6397430
Pressure Rating: 400 PSIG (WOG)

Intended for use with Class 200 or 700 Copper Nickel Tube IAW MIL-T-16420

SERVICE RATING TABLE				
Nominal Pipe Size (INCHES)	Maximum Working Pressure (LB/IN²)	Maximum Temperature (°F)	Maximum Working Pressure (LB/IN²)	Maximum Temperature (°F)
1/4 through 6	200	425	400	150
Above 6	150	425	250	150

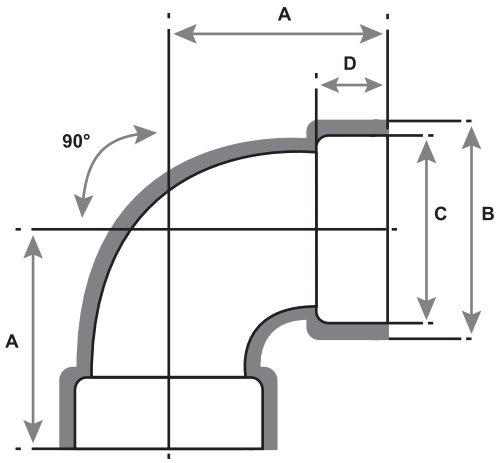



70/30 CUNI (ALLOY C715/C964)



90/10 CUNI (ALLOY C706/C962)

AVAILABLE ALLOYS: CUNI 90/10 & CUNI 70/30

NOMINAL PIPE SIZE	1/4"	3/8"	1/2"	3/4"	1"	1 1/4"	1 1/2"	2"	2 1/2"	3"	3 1/2"	4"
SMI P/N (90/10)	99SW040	99SW060	99SW100	99SW150	99SW200	99SW250	99SW300	99SW400	99SW450	99SW500	99SW550	99SW600
SMI P/N (70/30)	97SW040	97SW060	97SW100	97SW150	97SW200	97SW250	97SW300	97SW400	97SW450	97SW500	97SW550	97SW600
A	0.710	0.820	1.010	1.180	1.430	1.690	1.840	2.120	2.700	3.080	3.420	3.790
B	0.945	1.096	1.275	1.503	1.780	2.129	2.387	2.908	3.408	4.041	4.541	5.097
C	.545 (+/- .030)	.680 (+/- .030)	.845 (+/- .030)	1.055 (+/- .030)	1.320 (+/-.030)	1.665 (+/- .030)	1.905 (+/- .030)	2.380 (+/- .046)	2.880 (+/- .051)	3.505 (+/- .055)	4.005 (+/- .055)	4.505 (+/- .060)
D	17/64	5/16	3/8	13/32	7/16	1/2	5/8	23/35	25/32	77/93	7/8	29/32

NOTES: Fittings may be ordered with reduced ends and/or female threads.

SUNFLEX
METALLOY PVT. LTD.
AN ISO 9001:2015 CERTIFIED CO.

LONG TURN SINGLE SWEEP TEE

SOCKET WELD

Specifcation: NAVSEA DWG 803-6397430

Pressure Rating: 400 PSIG (WOG)

Intended for use with Class 200 or 700 Copper Nickel Tube IAW MIL-T-16420

SERVICE RATING TABLE				
Nominal Pipe Size (INCHES)	Maximum Working Pressure (LB/IN²)	Maximum Temperature (°F)	Maximum Working Pressure (LB/IN²)	Maximum Temperature (°F)
1/4 through 6	200	425	400	150
Above 6	150	425	250	150

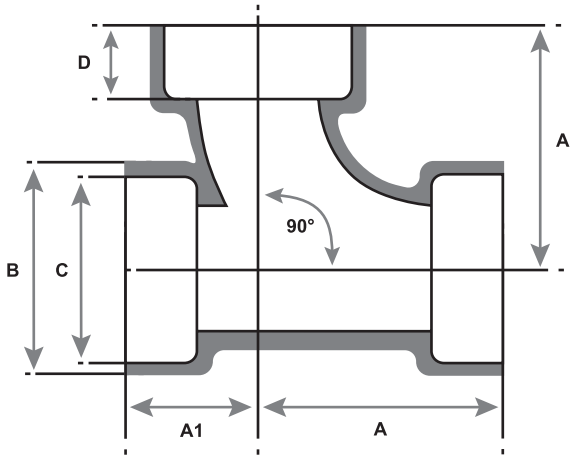



70/30 CUNI (ALLOY C715/C964)



90/10 CUNI (ALLOY C706/C962)

AVAILABLE ALLOYS: CUNI 90/10 & CUNI 70/30

NOMINAL PIPE SIZE	1/4"	3/8"	1/2"	3/4"	1"	1 1/4"	1 1/2"	2"	2 1/2"	3"	3 1/2"	4"
SMI P/N (90/10)	SST9SW040	SST9SW060	SST9SW100	SST9SW150	SST9SW200	SST9SW250	SST9SW300	SST9SW400	SST9SW450	SST9SW500	SST9SW550	SST9SW600
SMI P/N (70/30)	SST7SW040	SST7SW060	SST7SW100	SST7SW150	SST7SW200	SST7SW250	SST7SW300	SST7SW400	SST7SW450	SST7SW500	SST7SW550	SST7SW600
A	1.250	1.500	1.750	2.000	2.310	2.750	3.130	3.750	4.500	5.440	6.190	6.940
A1	7.500	0.880	1.000	1.190	1.310	1.680	1.880	2.130	2.560	2.880	3.250	3.560
B	0.945	1.096	1.275	1.503	1.780	2.129	2.387	2.908	3.408	4.041	4.541	5.097
C	.545 (+/- .030)	.680 (+/- .030)	.845 (+/- .030)	1.055 (+/- .030)	1.320 (+/-.030)	1.665 (+/- .030)	1.905 (+/- .030)	2.380 (+/- .046)	2.880 (+/- .051)	3.505 (+/- .055)	4.005 (+/- .055)	4.505 (+/- .060)
D	25/94	5/16	3/8	13/32	7/16	1/2	5/8	23/35	25/32	77/93	7/8	29/32

NOTES: Fittings may be ordered with reduced ends and/or female threads.

SUNFLEX
METALLOY PVT. LTD.
AN ISO 9001:2015 CERTIFIED CO.

SUNFLEX
METALLOY PVT. LTD.
AN ISO 9001:2015 CERTIFIED CO.

UNION TAILPIECE

SOCKET WELD

Specifcation: NAVSEA DWG 803-6397430

Pressure Rating: 400 PSIG (WOG)

Intended for use with Class 200 or 700 Copper Nickel Tube IAW MIL-T-16420

SERVICE RATING TABLE				
Nominal Pipe Size (INCHES)	Maximum Working Pressure (LB/IN²)	Maximum Temperature (°F)	Maximum Working Pressure (LB/IN²)	Maximum Temperature (°F)
1/4 through 6 Above 6	200 150	425 425	400 250	150 150

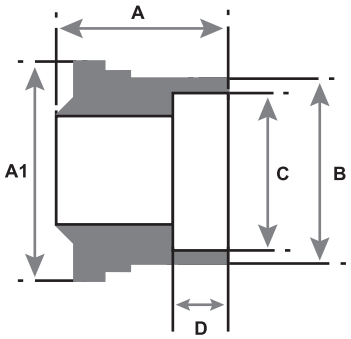





70/30 CUNI
(ALLOY C715/C964)





90/10 CUNI
(ALLOY C706/C962)

AVAILABLE ALLOYS: CUNI 90/10 & CUNI 70/30

NOMINAL PIPE SIZE	1/4"	3/8"	1/2"	3/4"	1"	1 1/4"	1 1/2"	2"
SMI P/N (90/10)	TP9SW040	TP9SW060	TP9SW100	TP9SW150	TP9SW200	TP9SW250	TP9SW300	TP9SW400
SMI P/N (70/30)	TP7SW040	TP7SW060	TP7SW100	TP7SW150	TP7SW200	TP7SW250	TP7SW300	TP7SW400
A	0.87 (+/- .02)	0.96 (+/- .02)	1.05 (+/- .02)	1.15 (+/- .02)	1.3 (+/- .02)	1.47 (+/- .02)	1.62 (+/- .02)	1.85 (+/- .02)
A1	0.61 (+/- .005)	0.755 (+/- .005)	0.96 (+/- .005)	1.14 (+/- .005)	1.445 (+/- .005)	1.77 (+/- .005)	2.06 (+/- .005)	2.545 (+/- .005)
B	.828 (+/- .015)	.984 (+/- .015)	1.188 (+/- .015)	1.468 (+/- .015)	1.750 (+/- .015)	2.125 (+/- .015)	2.375 (+/- .015)	2.906 (+/- .015)
C	.545 (-.000 / +.030)	.680 (-.000 / +.030)	.845 (-.000 / +.030)	1.055 (-.000 / +.030)	1.320 (-.000 / +.030)	1.665 (-.000 / +.030)	1.905 (-.000 / +.030)	2.380 (-.000 / +.046)
D	17/64	5/16	3/8	13/32	7/16	1/2	5/8	21/32

NOTES: Fittings may be ordered with reduced ends and/or female threads

SUNFLEX
METALLOY PVT. LTD.
AN ISO 9001:2015 CERTIFIED CO.

SUNFLEX
METALLOY PVT. LTD.
AN ISO 9001:2015 CERTIFIED CO.

TEE

SOCKET WELD

Specifcation: NAVSEA DWG 803-6397430

Pressure Rating: 400 PSIG (WOG)

Intended for use with Class 200 or 700 Copper Nickel Tube IAW MIL-T-16420

SERVICE RATING TABLE				
Nominal Pipe Size (INCHES)	Maximum Working Pressure (LB/IN²)	Maximum Temperature (°F)	Maximum Working Pressure (LB/IN²)	Maximum Temperature (°F)
1/4 through 6 Above 6	200 150	425 425	400 250	150 150

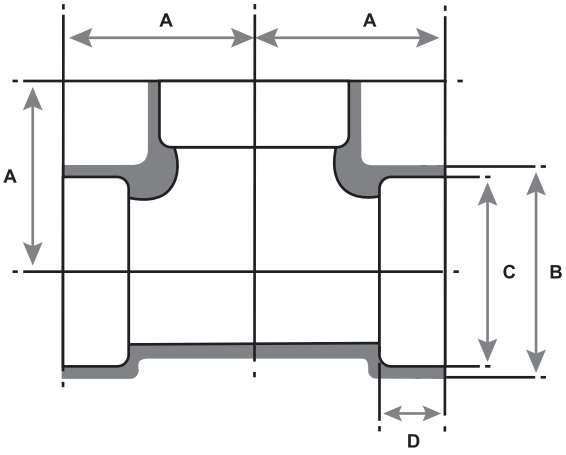



70/30 CUNI
(ALLOY C715/C964)



90/10 CUNI
(ALLOY C706/C962)

AVAILABLE ALLOYS: CUNI 90/10 & CUNI 70/30

NOMINAL PIPE SIZE	1/4"	3/8"	1/2"	3/4"	1"	1 1/4"	1 1/2"	2"	2 1/2"	3"	3 1/2"	4"
SMI P/N (90/10)	T9SW040	T9SW060	T9SW100	T9SW150	T9SW200	T9SW250	T9SW300	T9SW400	T9SW450	T9SW500	T9SW550	T9SW600
SMI P/N (70/30)	T7SW040	T7SW060	T7SW100	T7SW150	T7SW200	T7SW250	T7SW300	T7SW400	T7SW450	T7SW500	T7SW550	T7SW600
A	0.710	0.820	1.010	1.180	1.430	1.690	1.840	2.120	2.700	3.080	3.420	3.790
B	0.945	1.096	1.275	1.503	1.780	2.129	2.387	2.908	3.408	4.041	4.541	5.097
C	.545 (+/- .030)	.680 (+/- .030)	.845 (+/- .030)	1.055 (+/- .030)	1.320 (+/-.030)	1.665 (+/- .030)	1.905 (+/- .030)	2.380 (+/- .046)	2.880 (+/- .051)	3.505 (+/- .055)	4.005 (+/- .055)	4.505 (+/- .060)
D	25/94	5/16	3/8	13/32	7/16	1/2	5/8	23/35	25/32	77/93	7/8	29/32

NOTES: Fittings may be ordered with reduced ends and/or female threads.

SUNFLEX
METALLOY PVT. LTD.
AN ISO 9001:2015 CERTIFIED CO.

SUNFLEX
METALLOY PVT. LTD.
AN ISO 9001:2015 CERTIFIED CO.

UNION THREADPIECE

SOCKET WELD

Specifcation: NAVSEA DWG 803-6397430

Pressure Rating: 400 PSIG (WOG)

Intended for use with Class 200 or 700 Copper Nickel Tube IAW MIL-T-16420

SERVICE RATING TABLE				
Nominal Pipe Size (INCHES)	Maximum Working Pressure (LB/IN²)	Maximum Temperature (°F)	Maximum Working Pressure (LB/IN²)	Maximum Temperature (°F)
1/4 through 6 Above 6	200 150	425 425	400 250	150 150

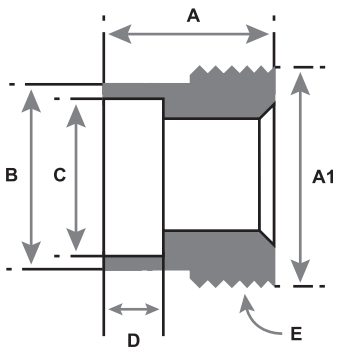



70/30 CUNI (ALLOY C715/C964)





90/10 CUNI (ALLOY C706/C962)



AVAILABLE ALLOYS: CUNI 90/10 & CUNI 70/30

NOMINAL PIPE SIZE	1/4"	3/8"	1/2"	3/4"	1"	1 1/4"	1 1/2"	2"
SMI P/N (90/10)	TH9SW040	TH9SW060	TH9SW100	TH9SW150	TH9SW200	TH9SW250	TH9SW300	TH9SW400
SMI P/N (70/30)	TH7SW040	TH7SW060	TH7SW100	TH7SW150	TH7SW200	TH7SW250	TH7SW300	TH7SW400
A	.85 (+/- .02)	.94 (+/- .391)	.99 (+/- .391)	1.18 (+/-.500)	1.25 (+/- .500)	1.43 (+/- .500)	1.58 (+/- .547)	1.67 (+/- .547)
A1	1.0846 MIN. - 1.0940 MAX.	1.2697 MIN. - 1.2800 MAX.	1.4764 MIN. - 1.4867 MAX	1.8172 MIN. - 1.8293 MAX.	2.1471 MIN. - 2.1592 MAX.	2.5821 MIN. - 2.5950 MAX.	2.9021 MIN. - 2.9150 MAX.	3.5020 MIN. - 3.5149 MAX.
B	.828(+/- .010)	.984 (+/- .010)	1.188 (+/- .010)	1.468 (+/- .010)	1.750 (+/- .010)	2.125 (+/- .010)	2.375 (+/- .010)	2.906 (+/- .010)
C	.545 (+.030 / -.000)	.680 (+.030 / -.000)	.845 (+.030 / -.000)	1.055 (+.030 / -.000)	1.320 (+.030 / -.000)	1.665 (+.030 / -.000)	1.905 (+.030 / -.000)	2.380 (+.046 / -.000)
D	17/64 (MIN)	5/16 (MIN)	3/8 (MIN)	13/32 (MIN)	7/16 (MIN)	1/2 (MIN)	5/8 (MIN)	21/32 (MIN)
E	16-UNS	14-UNS	14-UNS	11-UNS	11-UNS	10-UNS	10-UNS	10-UNS

NOTES: Fittings may be ordered with reduced ends and/or female threads

SUNFLEX
METALLOY PVT. LTD.
AN ISO 9001:2015 CERTIFIED CO.

SUNFLEX
METALLOY PVT. LTD.
AN ISO 9001:2015 CERTIFIED CO.

UNION ASSEMBLY

SOCKET WELD

Specifcation: NAVSEA DWG 803-6397430

Pressure Rating: 400 PSIG (WOG)

Intended for use with Class 200 or 700 Copper Nickel Tube IAW MIL-T-16420

SERVICE RATING TABLE				
Nominal Pipe Size (INCHES)	Maximum Working Pressure (LB/IN²)	Maximum Temperature (°F)	Maximum Working Pressure (LB/IN²)	Maximum Temperature (°F)
1/4 through 6 Above 6	200 150	425 425	400 250	150 150

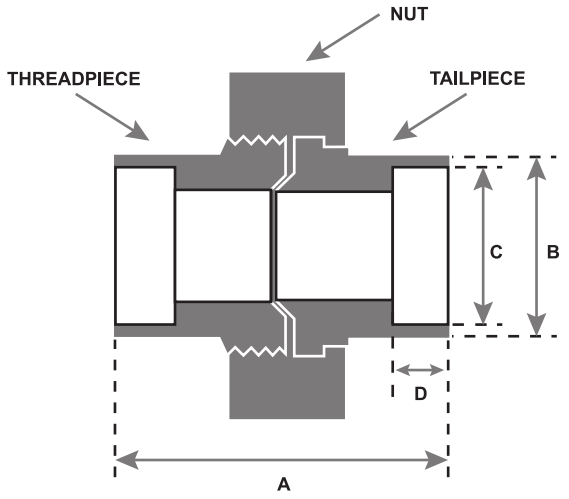

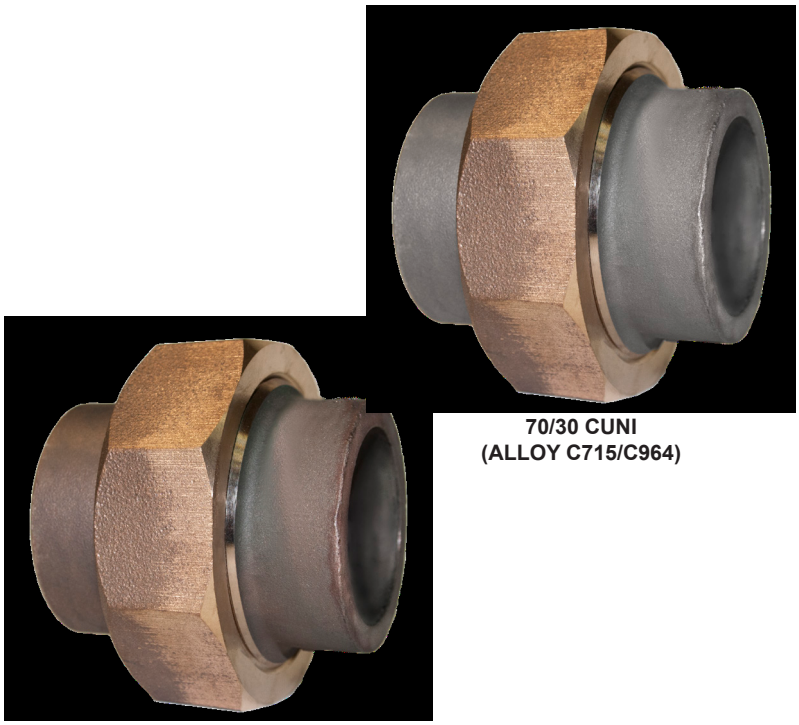

70/30 CUNI
(ALLOY C715/C964)

90/10 CUNI
(ALLOY C706/C962)

AVAILABLE ALLOYS: CUNI 90/10 & CUNI 70/30

NOMINAL PIPE SIZE	1/4"	3/8"	1/2"	3/4"	1"	1 1/4"	1 1/2"	2"
SMI P/N (90/10)	U9SW040	U9SW060	U9SW100	U9SW150	U9SW200	U9SW250	U9SW300	U9SW400
SMI P/N (70/30)	U7SW040	U7SW060	U7SW100	U7SW150	U7SW200	U7SW250	U7SW300	U7SW400
A	1 5/8	1 13/16	1 15/16	2 1/4	2 7/16	2 13/16	3	3 3/8
B	.828 (+/- .015)	.984 (+/- .015)	1.188 (+/- .015)	1.468 (+/- .015)	1.750 (+/- .015)	2.125 (+/- .015)	2.375 (+/- .015)	2.906 (+/- .015)
C	.545 (-.000 /+ .030)	.680 (-.000 /+.030)	.845 (-.000 /+.030)	1.055 (-.000 /+.030)	1.320 (-.000 /+.030)	1.665 (-.000 /+.030)	1.905 (-.000 /+.030)	2.380 (-.000 /+.046)
D	17/64	5/16	3/8	13/32	7/16	1/2	5/8	21/32

NOTES: Fittings may be ordered with reduced ends and/or female threads

SUNFLEX
METALLOY PVT. LTD.
AN ISO 9001:2015 CERTIFIED CO.

SUNFLEX
METALLOY PVT. LTD.
AN ISO 9001:2015 CERTIFIED CO.

UNION NUT
SOCKET WELD

Specifcation: NAVSEA DWG 803-6397430
Pressure Rating: 400 PSIG (WOG)

Intended for use with Class 200 or 700
Copper Nickel Tube IAW MIL-T-16420

SERVICE RATING TABLE

Nominal Pipe Size (INCHES)	Maximum Working Pressure (LB/IN²)	Maximum Temperature (°F)	Maximum Working Pressure (LB/IN²)	Maximum Temperature (°F)
1/4 through 6	200	425	400	150
Above 6	150	425	250	150

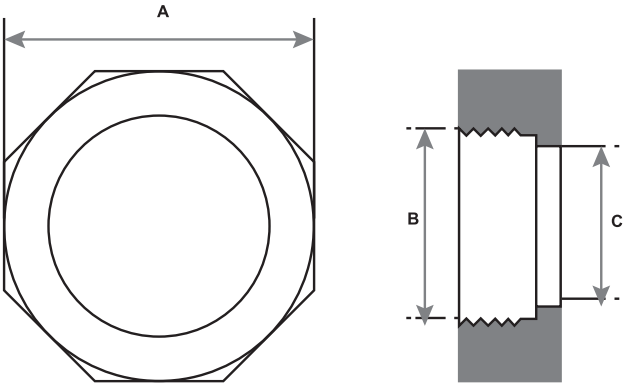



BRONZE
ASTM B61 / QQ-C-390 / MIL-B-16541
(ALLOY C90300 / C92200)

AVAILABLE ALLOY: BRONZE

NOMINAL PIPE SIZE	1/4"	3/8"	1/2"	3/4"	1"	1 1/4"	1 1/2"	2"
SMI P/N (90/10)	UNBSB040	UNBSB060	UNBSB100	UNBSB150	UNBSB200	UNBSB250	UNBSB300	UNBSB400
A	1-11/32 (+/- 1/16)	1-35/64 (+/- 1/16)	1-25/32 (+/- 1/16)	2-3/16 (+/- 1/16)	2-35/64 (+/- 1/16)	3-3/64 (+/- 1/16)	3-25/64 (+/- 1/16)	4-3/64 (+/- 1/16)
B	1.095	1.281	1.491	1.835	2.165	2.601	2.921	3.521
C	.86 (+/- .01)	1.02 (+/- .01)	1.22 (+/- .01)	1.51 (+/- .01)	1.82 (+/- .01)	2.22 (+/- .01)	2.52 (+/- .01)	3.09 (+/- .01)

NOTES: Fittings may be ordered with reduced ends and/or female threads

SUNFLEX
METALLOY PVT. LTD.
AN ISO 9001:2015 CERTIFIED CO.

FEMALE UNION X TUBE SOCKET WELD ADAPTER

INSTRUMENTATION

Specifcation: 7801 SERIES

Equal To:
CPV Manufacturing - 949R (Tailpiece)
CPV Manufacturing - 950N (Nut)

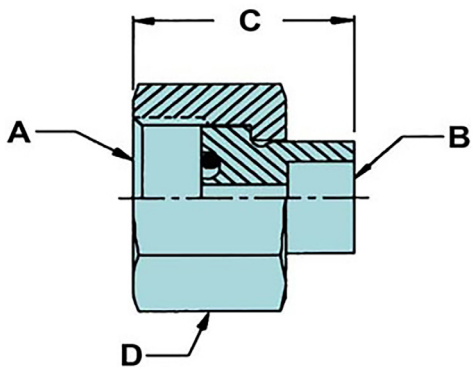

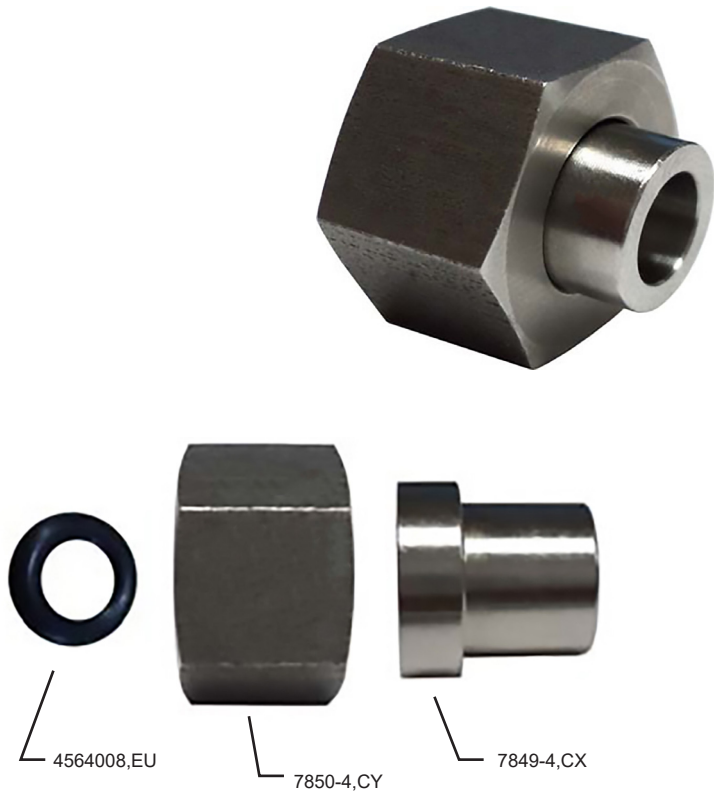

AVAILABLE ALLOYS: NICU (MONEL), STAINLESS STEEL
Other material available upon request.

CATALOG NUMBER	A (THD)	B (O.D. SW)	C	D (HEX)
7801-4-4	9/16 - 18 UNF 2B	1/4	5/8	11/16

NOTES: Other sizes are available upon request

SUNFLEX
METALLOY PVT. LTD.
AN ISO 9001:2015 CERTIFIED CO.

SIL-BRAZE TAILPIECE

PIPE FITTINGS

Specifcation: 6R52 SERIES
Pressure Rating: 6000 PSI

Equal To:
CPV Manufacturing - 52R
SSP - Q502R (Stainless Steel)
SSP - Q502R - M (Monel)

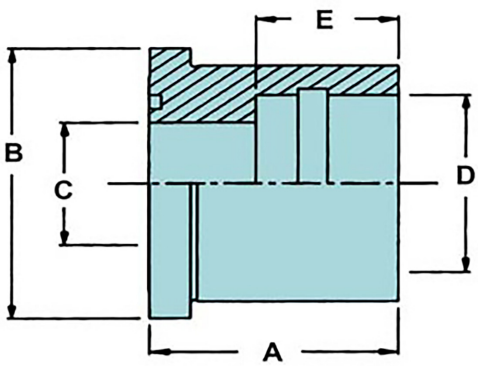



AVAILABLE ALLOYS: BRONZE, NAVAL BRASS (NAB)
Other material available upon request.

CATALOG NUMBER	PIPE SIZE	A	B	C	D	E
6R52-0-0*	1/8	15/16	29/32	.22	.408	3/8
6R52-1-1	1/4	1 1/16	1 1/16	.36	.543	3/8
6R52-2-2	3/8	1 7/32	1 1/4	.47	.678	15/32
6R52-3-3	1/2	1 5/16	1 5/8	.59	.843	9/16
6R52-4-4	3/4	1 7/16	1 7/8	.74	1.053	11/16
6R52-5-5*	1	1 9/16	2 3/16	.93	1.318	13/16
6R52-6-6*	1 1/4	1 3/4	2 5/8	1.17	1.663	15/16
6R52-7-7*	1 1/2	2	2 15/16	1.35	1.905	1 1/16
6R52-8-8*	2	2 3/16	3 5/8	1.65	2.380	1 1/4
6R52-9-9*	2 1/2	2 3/8	4 5/16	2.05	2.882	1 5/16

*NOTES: * Call for availability*

SUNFLEX
METALLOY PVT. LTD.
AN ISO 9001:2015 CERTIFIED CO.

SUNFLEX
METALLOY PVT. LTD.
AN ISO 9001:2015 CERTIFIED CO.

SIL-BRAZE THREADPIECE

PIPE FITTINGS

Specifcation: 6T52 SERIES
Pressure Rating: 6000 PSI

Equal To:
CPV Manufacturing - 52T
SSP - Q502T (Stainless Steel)
SSP - Q502T - M (Monel)

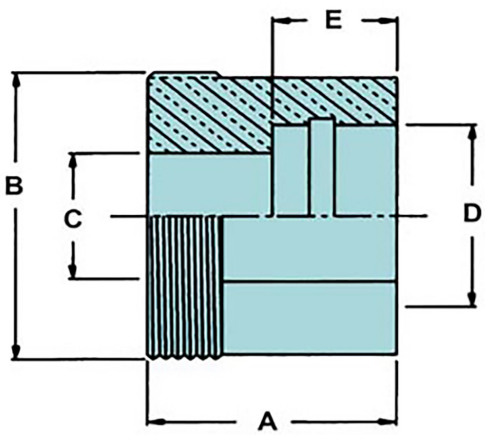



AVAILABLE ALLOYS: BRONZE, NAVAL BRASS (NAB)
Other material available upon request.

CATALOG NUMBER	PIPE SIZE	A	B (THD)	C	D	E
6T52-0-0*	1/8	7/8	1 - 14	.22	.408	3/8
6T52-1-1	1/4	1 3/16	1 3/16 - 12	.36	.543	3/8
6T52-2-2	3/8	1 1/4	1 3/8 -12	.47	.678	15/32
6T52-3-3	1/2	1 5/16	1 3/4 - 12	.59	.843	9/16
6T52-4-4	3/4	1 7/16	2 - 12	.74	1.053	11/16
6T52-5-5*	1	1 3/4	2 5/16 - 12	.93	1.318	13/16
6T52-6-6*	1 1/4	1 15/16	2 3/4 - 12	1.17	1.663	15/16
6T52-7-7*	1 1/2	2 5/16	3 1/16 - 12	1.35	1.905	1 1/16
6T52-8-8*	2	2 1/2	3 3/4 - 12	1.65	2.380	1 1/4
6T52-9-9*	2 1/2	2 9/16	4 1/2 - 12	2.05	2.882	1 5/16

*NOTES: * Call for availability*

SUNFLEX
METALLOY PVT. LTD.
AN ISO 9001:2015 CERTIFIED CO.

SUNFLEX
METALLOY PVT. LTD.
AN ISO 9001:2015 CERTIFIED CO.

SOCKET WELD TAILPIECE

PIPE FITTINGS

Specifcation: 6R51 SERIES
Pressure Rating: 6000 PSI

Equal To:
CPV Manufacturing - 51R
SSP - Q501R (Stainless Steel)
SSP - Q501R - M (Monel)

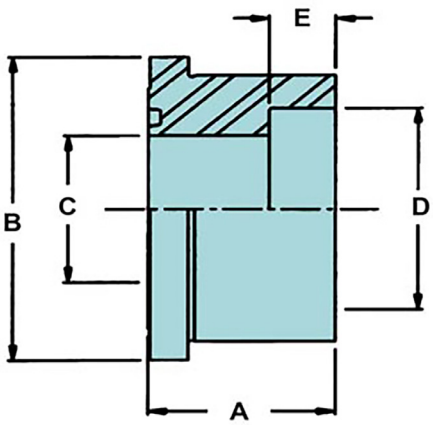



AVAILABLE ALLOYS: STEEL & STAINLESS STEEL, CUNI
Other material available upon request.

CATALOG NUMBER	PIPE SIZE	A	B	C	D	E
6R51-0-0*	1/8	11/16	29/32	7/32	.420	3/8
6R51-1-1	1/4	1 1/16	1 1/16	5/16	.555	3/8
6R51-2-2	3/8	1 1/8	1 1/4	7/16	.690	3/8
6R51-3-3	1/2	1 1/8	1 5/8	1/2	.855	3/8
6R51-4-4	3/4	1 1/8	1 7/8	5/8	1.065	1/2
6R51-5-5	1	1 1/4	2 3/16	13/16	1.330	1/2
6R51-6-6	1 1/4	1 3/8	2 5/8	1 3/16	1.675	1/2
6R51-7-7	1 1/2	1 5/8	2 15/16	1 3/8	1.915	1/2
6R51-8-8	2	1 3/4	3 5/8	1 3/4	2.406	5/8
6R51-9-9*	2 1/2	2	4 5/16	2 1/8	2.906	1
6R51-10-10*	3	2 1/8	5 1/16	2 5/8	3.531	1 1/8

*NOTES: * Call for availability*

SUNFLEX
METALLOY PVT. LTD.
AN ISO 9001:2015 CERTIFIED CO.

SUNFLEX
METALLOY PVT. LTD.
AN ISO 9001:2015 CERTIFIED CO.

SOCKET WELD THREADPIECE

PIPE FITTINGS

Specifcation: 6T51 SERIES
Pressure Rating: 6000 PSI

Equal To:
CPV Manufacturing - 51T
SSP - Q501T (Stainless Steel)
SSP - Q501T - M (Monel)

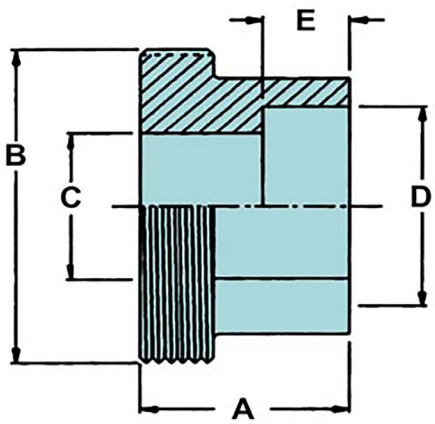



AVAILABLE ALLOYS: STEEL & STAINLESS STEEL, CUNI
Other material available upon request.

CATALOG NUMBER	PIPE SIZE	A	B (THD)	C	D	E
6T51-0-0*	1/8	7/8	1 - 14	7/32	.420	7/16
6T51-1-1	1/4	1 3/16	1 3/16 - 12	5/16	.555	7/16
6T51-2-2	3/8	1 1/4	1 3/8 - 12	7/16	.690	7/16
6T51-3-3	1/2	1 5/16	1 3/4 - 12	1/2	.855	1/2
6T51-4-4	3/4	1 5/16	2 - 12	5/8	1.065	9/16
6T51-5-5	1	1 9/16	2 5/16 - 12	13/16	1.330	5/8
6T51-6-6	1 1/4	1 11/16	2 3/4 - 12	1 3/16	1.675	11/16
6T51-7-7	1 1/2	2	3 1/16 - 12	1 3/8	1.915	3/4
6T51-8-8	2	2 1/8	3 3/4 - 12	1 3/4	2.406	7/8
6T51-9-9*	2 1/2	2 9/16	4 1/2 - 12	2 1/8	2.906	1

*NOTES: * Call for availability*

SUNFLEX
METALLOY PVT. LTD.
AN ISO 9001:2015 CERTIFIED CO.

SUNFLEX
METALLOY PVT. LTD.
AN ISO 9001:2015 CERTIFIED CO.

BLANK TAILPIECE

PIPE FITTINGS

Specifcation: 6R104 SERIES
Pressure Rating: 6000 PSI

Equal To:
CPV Manufacturing - 104R

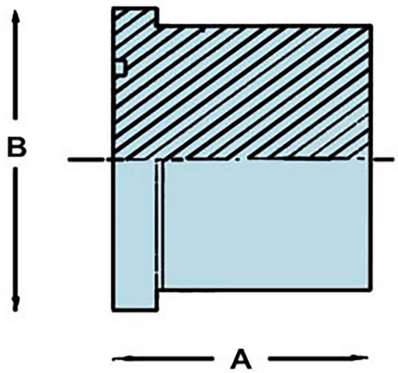

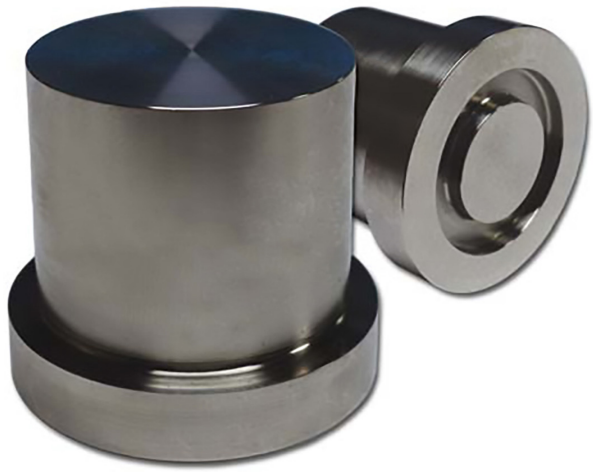

AVAILABLE ALLOYS: STEEL & STAINLESS STEEL, BRONZE
Other material available upon request.

CATALOG NUMBER	PIPE SIZE	A	B
6R104-0*	1/8	1 1/16	.912
6R104-1	1/4	1 1/8	1.068
6R104-2	3/8	1 9/32	1.255
6R104-3	1/2	1 3/8	1.630
6R104-4	3/4	1 1/2	1.880
6R104-5	1	1 11/16	2.193
6R104-6	1 1/4	1 13/16	2.630
6R104-7	1 1/2	2 1/16	2.943
6R104-8	2	2 1/4	3.63
6R104-9*	2 1/2	2 7/16	4.318

*NOTES: * Call for availability*

SUNFLEX
METALLOY PVT. LTD.
AN ISO 9001:2015 CERTIFIED CO.

SUNFLEX
METALLOY PVT. LTD.
AN ISO 9001:2015 CERTIFIED CO.

UNION NUT

PIPE FITTINGS

Specifcation: 6N50 SERIES
Pressure Rating: 6000 PSI

Equal To:
CPV Manufacturing - 50N
SSP - Q500N (Stainless Steel)
SSP - Q500N - M (Monel)

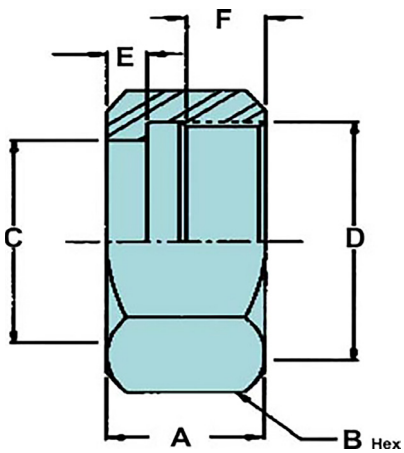



AVAILABLE ALLOYS:
STEEL & STAINLESS STEEL, NICU (MONEL), BRONZE, NAVAL BRASS (NAB)
Other material available upon request.

CATALOG NUMBER	PIPE SIZE	A	B	C	D (THD)	E	F
6N50-0*	1/8	3/4	1 3/16	.687	1-14	3/16	7/16
6N50-1	1/4	1	1 3/8	.878	1 3/16 - 12	1/4	9/16
6N50-2	3/8	1 1/16	1 5/8	1.003	1 3/8 - 12	1/4	9/16
6N50-3	1/2	1 1/16	2	1.378	1 3/4 - 12	1/4	9/16
6N50-4	3/4	1 1/8	2 3/8	1.628	2 - 12	5/16	9/16
6N50-5	1	1 1/4	2 3/4	1.940	2 5/16 - 12	5/16	11/16
6N50-6	1 1/4	1 1/4	3	2.378	2 3/4 - 12	5/16	11/16
6N50-7	1 1/2	1 1/2	3 1/2	2.565	3 1/16 - 12	3/8	13/16
6N50-8	2	1 1/2	4 1/8	3.190	3 3/4 - 12	3/8	13/16
6N50-9*	2 1/2	1 7/8	5 1/8	3.941	4 1/2 - 12	7/16	1 1/16
6N50-10*	3	2 1/8	6	4.635	5 1/4 - 12	1/2	1 1/4

*NOTES: * Call for availability*

SUNFLEX
METALLOY PVT. LTD.
AN ISO 9001:2015 CERTIFIED CO.

BLANK THREADPIECE

PIPE FITTINGS

Specifcation: 6T104 SERIES
Pressure Rating: 6000 PSI

Equal To:
CPV Manufacturing - 104R

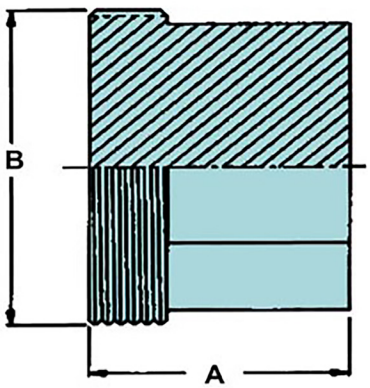



AVAILABLE ALLOYS: STEEL & STAINLESS STEEL, BRONZE
Other material available upon request.

CATALOG NUMBER	PIPE SIZE	A	B (THD)
6T104-0*	1/8	1 1/4	1 - 14
6T104-1	1/4	1 1/4	1 3/16 - 12
6T104-2	3/8	1 5/16	1 3/8 - 12
6T104-3	1/2	1 1/2	1 3/4 - 12
6T104-4	3/4	1 11/16	2 - 12
6T104-5	1	2	2 5/16 - 12
6T104-6	1 1/4	2	2 3/4 - 12
6T104-7	1 1/2	2 5/16	3 1/16 - 12
6T104-8	2	2 1/2	3 3/4 - 12
6T104-9*	2 1/2	2 9/16	4 1/2 - 12

*NOTES: * Call for availability*

SUNFLEX
METALLOY PVT. LTD.
AN ISO 9001:2015 CERTIFIED CO.

TAILPIECE
TUBE FITTINGS

Specifcation: 8308 SERIES
Pressure Rating: 3000 PSI

Equal To:
CPV Manufacturing - H849R
SSP - P- S (316 Stainless Steel)
SSP - P - S - M (Monel)

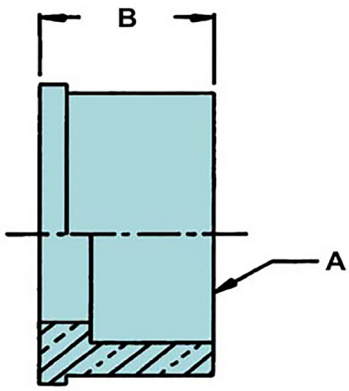

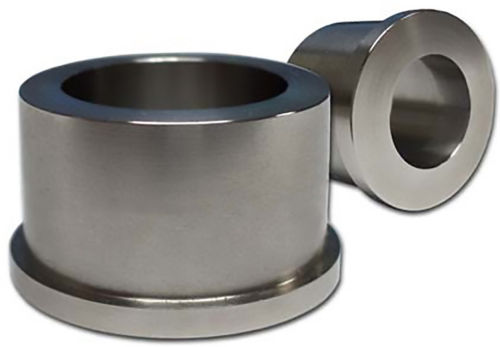

AVAILABLE ALLOYS: NICU (MONEL), STAINLESS STEEL
Other material available upon request.

CATALOG NUMBER	A (TUBE O.D.)	B	SOCKET DEPTH
8308-2*	1/8	3/8	3/16
8308-4	1/4	3/8	3/16
8308-6	3/8	7/16	1/4
8308-8	1/2	1/2	5/16
8308-10	5/8	5/8	3/8
8308-12	3/4	11/16	7/16
8308-16	1	13/16	1/2
8308-20	1 1/4	7/8	9/16
8308-24*	1 1/2	15/16	5/8
8308-32*	2	1 1/4	7/8

*NOTES: * Call for availability*

SUNFLEX
METALLOY PVT. LTD.
AN ISO 9001:2015 CERTIFIED CO.

THREADPIECE
TUBE FITTINGS

Specifcation: 8303T SERIES
Pressure Rating: 3000 PSI

Equal To:
CPV Manufacturing - F859
CPV Manufacturing - H859 (Complete)
SSP - P- GC (316 Stainless Steel)
SSP - GC - M (Monel)

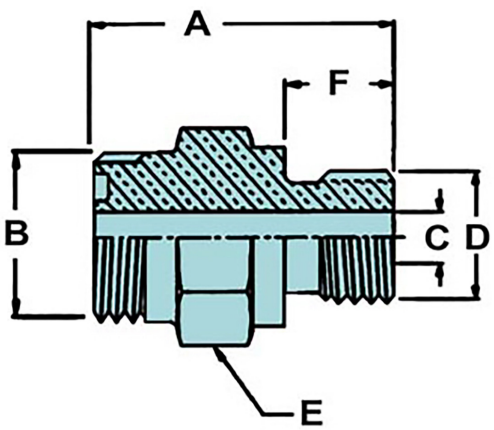



AVAILABLE ALLOYS: NICU (MONEL), STAINLESS STEEL
Other material available upon request.

CATALOG NUMBER	TUBE O.D.	A	B (THD)	C	D (THD)	E (HEX)	F
8303T-4	1/8	1 1/8	9/16 - 18	.170	7/16 - 20	5/8	.410
8303T-6	1/4	1 1/4	11/16 - 16	.290	9/16 - 18	3/4	.433
8303T-8	3/8	1 3/8	13/16 - 16	.390	3/4 - 16	7/8	.469
8303T-10	1/2	1 1/2	1 - 14	.480	7/8 - 14	1 1/16	.531
8303T-12	3/4	1 5/8	1 1/4 - 12	.600	1 1/16 - 12	1 3/8	.625
8303T-16	1	1 13/16	1 1/2 - 12	.840	15/16 - 12	1 5/8	.625
8303T-20	1 1/4	1 13/16	1 3/4 - 12	1.00	1 5/8 - 12	1 7/8	.625

NOTES: Other sizes are available upon request

SUNFLEX
METALLOY PVT. LTD.
AN ISO 9001:2015 CERTIFIED CO.

UNION NUT

PIPE FITTINGS

Specifcation: 6N50 SERIES
Pressure Rating: 6000 PSI

Equal To:
CPV Manufacturing - 50N
SSP - Q500N (Stainless Steel)
SSP - Q500N - M (Monel)

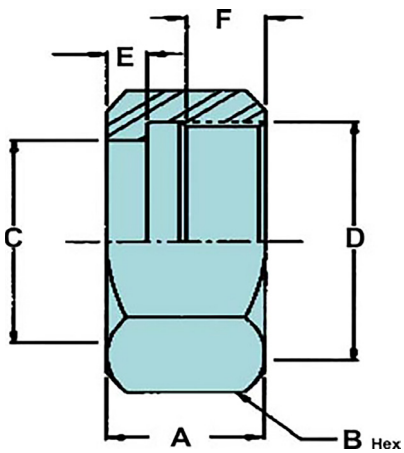



AVAILABLE ALLOYS:
STEEL & STAINLESS STEEL, NICU (MONEL), BRONZE, NAVAL BRASS (NAB)
Other material available upon request.

CATALOG NUMBER	PIPE SIZE	A	B	C	D (THD)	E	F
6N50-0*	1/8	3/4	1 3/16	.687	1-14	3/16	7/16
6N50-1	1/4	1	1 3/8	.878	1 3/16 - 12	1/4	9/16
6N50-2	3/8	1 1/16	1 5/8	1.003	1 3/8 - 12	1/4	9/16
6N50-3	1/2	1 1/16	2	1.378	1 3/4 - 12	1/4	9/16
6N50-4	3/4	1 1/8	2 3/8	1.628	2 - 12	5/16	9/16
6N50-5	1	1 1/4	2 3/4	1.940	2 5/16 - 12	5/16	11/16
6N50-6	1 1/4	1 1/4	3	2.378	2 3/4 - 12	5/16	11/16
6N50-7	1 1/2	1 1/2	3 1/2	2.565	3 1/16 - 12	3/8	13/16
6N50-8	2	1 1/2	4 1/8	3.190	3 3/4 - 12	3/8	13/16
6N50-9*	2 1/2	1 7/8	5 1/8	3.941	4 1/2 - 12	7/16	1 1/16
6N50-10*	3	2 1/8	6	4.635	5 1/4 - 12	1/2	1 1/4

*NOTES: * Call for availability*

SUNFLEX
METALLOY PVT. LTD.
AN ISO 9001:2015 CERTIFIED CO.

PIPE HANGER

TYPE 1

Specifcation: NAVSEA DWG 810-4714432

Neoprene Liner IAW ASTM D-2000-75E Shore A 60

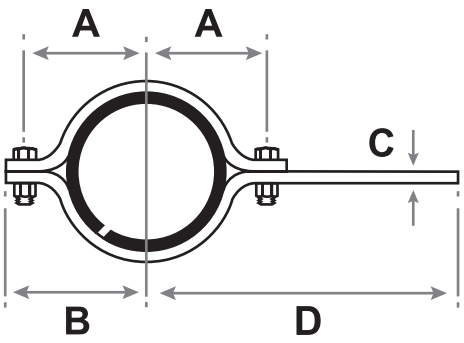



NOMINAL PIPE SIZE	SMI P/N	A	B	C	D	BOLT SIZE
1/4"	HANG**X**1-040	1.188	1.688	0.188	15 MAX	3/8
3/8"	HANG**X**1-060	1.125	1.750	0.188	15 MAX	3/8
1/2"	HANG**X**1-100	1.500	2.000	0.188	15 MAX	3/8
3/4"	HANG**X**1-150	1.688	2.188	0.188	15 MAX	3/8
1"	HANG**X**1-200	1.813	2.313	0.188	15 MAX	3/8
1 1/4"	HANG**X**1-250	2.000	2.500	0.188	15 MAX	3/8
1 1/2"	HANG**X**1-300	2.125	2.625	0.188	15 MAX	3/8
2"	HANG**X**1-400	2.500	3.125	0.250	15 MAX	1/2
2 1/2"	HANG**X**1-450	2.813	3.438	0.250	15 MAX	1/2
3"	HANG**X**1-500	3.125	3.750	0.250	15 MAX	1/2
3 1/2"	HANG**X**1-550	3.375	4.000	0.250	15 MAX	1/2
4"	HANG**X**1-600	3.750	4.500	0.250	15 MAX	5/8
5"	HANG**X**1-700	4.375	5.375	0.250	15 MAX	3/4
6"	HANG**X**1-800	4.938	5.938	0.250	15 MAX	3/4
8"	HANG**X**1-900	6.125	7.125	0.375	15 MAX	3/4
10"	HANG**X**1-1000	7.188	8.188	0.375	15 MAX	1
12"	HANG**X**1-1100	8.375	9.625	0.375	15 MAX	1

*NOTES: For P/N replace **X** for **CS** for A-36 Steel, **A** for 6061 Aluminum, **SS** for Stainless Steel.*

1/4" and 3/8" NPS Hangers have 1/8" liners; all other sizes have 1/4" liners.

SUNFLEX
METALLOY PVT. LTD.
AN ISO 9001:2015 CERTIFIED CO.

SUNFLEX
METALLOY PVT. LTD.
AN ISO 9001:2015 CERTIFIED CO.

PIPE HANGER
TYPE 2

Specifcation: NAVSEA DWG 810-4714432

Neoprene Liner IAW ASTM D-2000-75E Shore A 60

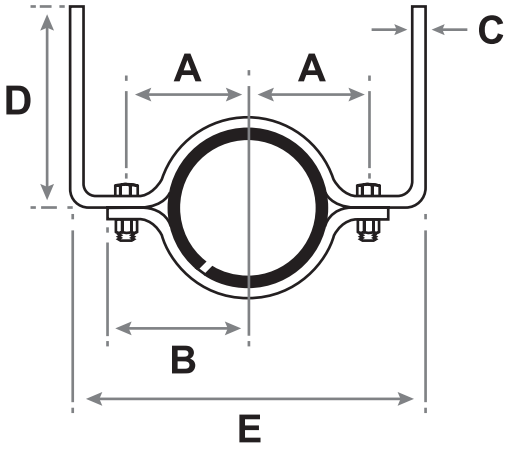

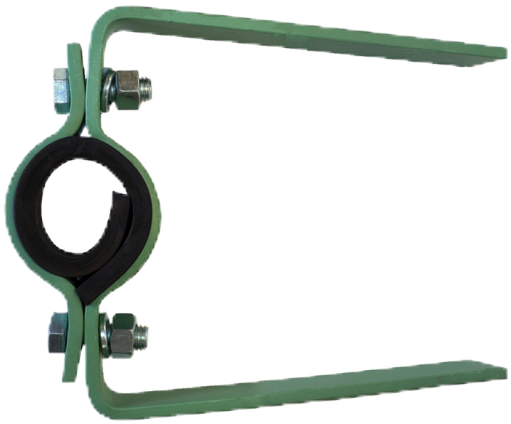

NOMINAL PIPE SIZE	SMI P/N	A	B	C	D	E	BOLT SIZE
1/4"	HANG**X**2-040	1.188	1.688	0.188	15 MAX	4.500	3/8
3/8"	HANG**X**2-060	1.125	1.750	0.188	15 MAX	4.625	3/8
1/2"	HANG**X**2-100	1.500	2.000	0.188	15 MAX	5.125	3/8
3/4"	HANG**X**2-150	1.688	2.188	0.188	15 MAX	5.500	3/8
1"	HANG**X**2-200	1.813	2.313	0.188	15 MAX	5.750	3/8
1 1/4"	HANG**X**2-250	2.000	2.500	0.188	15 MAX	6.125	3/8
1 1/2"	HANG**X**2-300	2.125	2.625	0.188	15 MAX	6.375	3/8
2"	HANG**X**2-400	2.500	3.125	0.250	15 MAX	7.375	1/2
2 1/2"	HANG**X**2-450	2.813	3.438	0.250	15 MAX	8.000	1/2
3"	HANG**X**2-500	3.125	3.750	0.250	15 MAX	8.625	1/2
3 1/2"	HANG**X**2-550	3.375	4.000	0.250	15 MAX	9.125	1/2
4"	HANG**X**2-600	3.750	4.500	0.250	15 MAX	10.125	5/8
5"	HANG**X**2-700	4.375	5.375	0.250	15 MAX	11.625	3/4
6"	HANG**X**2-800	4.938	5.938	0.250	15 MAX	12.750	3/4
8"	HANG**X**2-900	6.125	7.125	0.375	15 MAX	15.500	3/4
10"	HANG**X**2-1000	7.188	8.188	0.375	15 MAX	17.625	1
12"	HANG**X**2-1100	8.375	9.625	0.375	15 MAX	20.375	1

*NOTES: For P/N replace **X** for **CS** for A-36 Steel, **A** for 6061 Aluminum, **SS** for Stainless Steel.*

1/4" and 3/8" NPS Hangers have 1/8" liners; all other sizes have 1/4" liners.

SUNFLEX
METALLOY PVT. LTD.
AN ISO 9001:2015 CERTIFIED CO.

PIPE HANGER
TYPE 4

Specifcation: NAVSEA DWG 810-4714432

Neoprene Liner IAW ASTM D-2000-75E Shore A 60

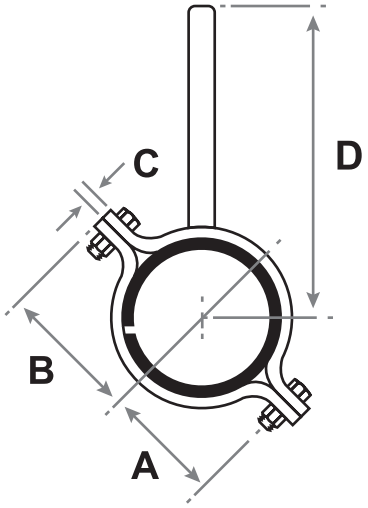



NOMINAL PIPE SIZE	SMI P/N	A	B	C	D	BOLT SIZE
1/4"	HANG**X**4-040	1.188	1.688	0.188	15 MAX	3/8
3/8"	HANG**X**4-060	1.250	1.750	0.188	15 MAX	3/8
1/2"	HANG**X**4-100	1.500	2.000	0.188	15 MAX	3/8
3/4"	HANG**X**4-150	1.688	2.188	0.188	15 MAX	3/8
1"	HANG**X**4-200	1.813	2.313	0.188	15 MAX	3/8
1 1/4"	HANG**X**4-250	2.000	2.500	0.188	15 MAX	3/8
1 1/2"	HANG**X**4-300	2.125	2.625	0.188	15 MAX	3/8
2"	HANG**X**4-400	2.500	3.125	0.250	15 MAX	1/2
2 1/2"	HANG**X**4-450	2.813	3.438	0.250	15 MAX	1/2
3"	HANG**X**4-500	3.125	3.750	0.250	15 MAX	1/2
3 1/2"	HANG**X**4-550	3.375	4.000	0.250	15 MAX	1/2
4"	HANG**X**4-600	3.750	4.500	0.250	15 MAX	5/8
5"	HANG**X**4-700	4.375	5.375	0.250	15 MAX	3/4
6"	HANG**X**4-800	4.938	5.938	0.250	15 MAX	3/4
8"	HANG**X**4-900	6.125	7.125	0.375	15 MAX	3/4
10"	HANG**X**4-1000	7.188	8.188	0.375	15 MAX	1
12"	HANG**X**4-1100	8.375	9.625	0.375	15 MAX	1

*NOTES: For P/N replace **X** for **CS** for A-36 Steel, **A** for 6061 Aluminum, **SS** for Stainless Steel.*

1/4" and 3/8" NPS Hangers have 1/8" liners; all other sizes have 1/4" liners.

SUNFLEX
METALLOY PVT. LTD.
AN ISO 9001:2015 CERTIFIED CO.

PIPE HANGER
TYPE 5

Specifcation: NAVSEA DWG 810-4714432

Neoprene Liner IAW ASTM D-2000-75E Shore A 60

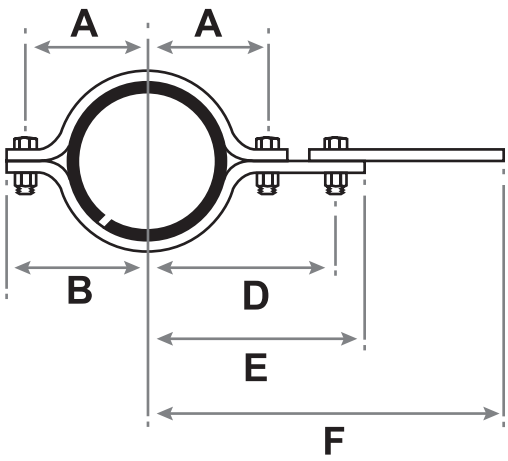



NOMINAL PIPE SIZE	SMI P/N	A	B	C	D	E	F	BOLT SIZE
1/4"	HANG**X**5-040	1.188	1.688	0.188	2.563	3.063	15 MIN	3/8
3/8"	HANG**X**5-060	1.250	1.750	0.188	2.625	3.125	15 MIN	3/8
1/2"	HANG**X**5-100	1.500	2.000	0.188	2.938	3.438	15 MIN	3/8
3/4"	HANG**X**5-150	1.688	2.188	0.188	3.125	3.625	15 MIN	3/8
1"	HANG**X**5-200	1.813	2.313	0.188	3.250	3.750	15 MIN	3/8
1 1/4"	HANG**X**5-250	2.000	2.500	0.188	3.438	3.938	15 MIN	3/8
1 1/2"	HANG**X**5-300	2.125	2.625	0.188	3.563	4.063	15 MIN	3/8
2"	HANG**X**5-400	2.500	3.125	0.250	4.188	4.813	15 MIN	1/2
2 1/2"	HANG**X**5-450	2.813	3.438	0.250	4.500	5.125	15 MIN	1/2
3"	HANG**X**5-500	3.125	3.750	0.250	4.813	5.438	15 MIN	1/2
3 1/2"	HANG**X**5-550	3.375	4.000	0.250	5.063	5.688	15 MIN	1/2
4"	HANG**X**5-600	3.750	4.500	0.250	5.688	6.438	15 MIN	5/8
5"	HANG**X**5-700	4.375	5.375	0.250	6.938	7.938	15 MIN	3/4
6"	HANG**X**5-800	4.938	5.938	0.250	7.688	8.688	15 MIN	3/4
8"	HANG**X**5-900	6.125	7.125	0.375	8.875	9.875	15 MIN	3/4
10"	HANG**X**5-1000	7.188	8.188	0.375	9.938	10.938	15 MIN	1
12"	HANG**X**5-1100	8.375	9.625	0.375	11.750	13.000	15 MIN	1

*NOTES: For P/N replace **X** for **CS** for A-36 Steel, **A** for 6061 Aluminum, **SS** for Stainless Steel.*

1/4" and 3/8" NPS Hangers have 1/8" liners; all other sizes have 1/4" liners.

SUNFLEX
METALLOY PVT. LTD.
AN ISO 9001:2015 CERTIFIED CO.

SUNFLEX
METALLOY PVT. LTD.
AN ISO 9001:2015 CERTIFIED CO.

PIPE HANGER
TYPE 7

Specifcation: NAVSEA DWG 810-4714432

Neoprene Liner IAW ASTM D-2000-75E Shore A 60

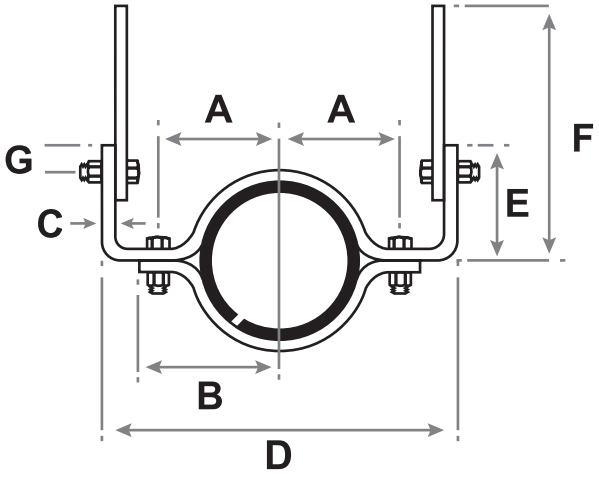

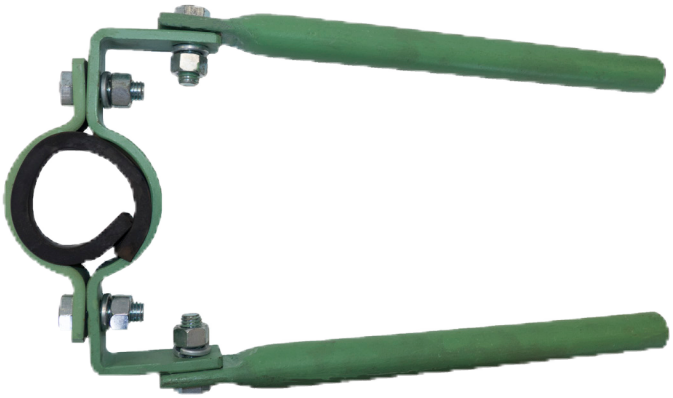

NOMINAL PIPE SIZE	SMI P/N	A	B	C	D	E	F	G	BOLT SIZE
1/4"	HANG**X**7-040	1.188	1.688	0.188	4.500	2.625	15 MIN	0.500	3/8
3/8"	HANG**X**7-060	1.250	1.750	0.188	4.625	2.625	15 MIN	0.500	3/8
1/2"	HANG**X**7-100	1.500	2.000	0.188	5.125	2.625	15 MIN	0.500	3/8
3/4"	HANG**X**7-150	1.688	2.188	0.188	5.500	2.625	15 MIN	0.500	3/8
1"	HANG**X**7-200	1.813	2.313	0.188	5.750	2.625	15 MIN	0.500	3/8
1 1/4"	HANG**X**7-250	2.000	2.500	0.188	6.125	2.625	15 MIN	0.500	3/8
1 1/2"	HANG**X**7-300	2.125	2.625	0.188	6.375	2.625	15 MIN	0.500	3/8
2"	HANG**X**7-400	2.500	3.125	0.250	7.375	2.875	15 MIN	0.625	1/2
2 1/2"	HANG**X**7-450	2.813	3.438	0.250	8.000	2.875	15 MIN	0.625	1/2
3"	HANG**X**7-500	3.125	3.750	0.250	8.625	2.875	15 MIN	0.625	1/2
3 1/2"	HANG**X**7-550	3.375	4.000	0.250	9.125	2.875	15 MIN	0.625	1/2
4"	HANG**X**7-600	3.750	4.500	0.250	10.125	3.125	15 MIN	0.750	5/8
5"	HANG**X**7-700	4.375	5.375	0.250	11.625	3.375	15 MIN	0.750	3/4
6"	HANG**X**7-800	4.938	5.938	0.250	12.750	3.375	15 MIN	0.750	3/4
8"	HANG**X**7-900	6.125	7.125	0.375	15.500	3.625	15 MIN	0.750	3/4
10"	HANG**X**7-1000	7.188	8.188	0.375	17.625	3.625	15 MIN	0.750	1
12"	HANG**X**7-1100	8.375	9.625	0.375	20.375	4.875	15 MIN	1.250	1

*NOTES: For P/N replace **X** for **CS** for A-36 Steel, **A** for 6061 Aluminum, **SS** for Stainless Steel.*

1/4" and 3/8" NPS Hangers have 1/8" liners; all other sizes have 1/4" liners.

SUNFLEX
METALLOY PVT. LTD.
AN ISO 9001:2015 CERTIFIED CO.

PIPE HANGER

TYPE 38 (NELSON)

Specifcation: NAVSEA DWG 810-4714432

Neoprene Liner IAW ASTM D-2000-75E Shore A 60

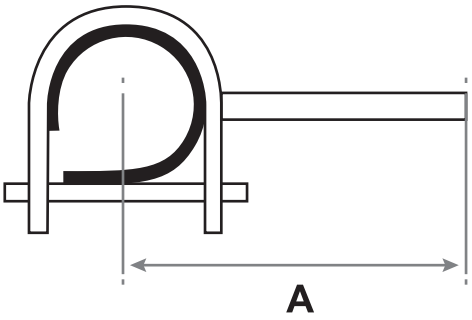



NOMINAL PIPE SIZE	SMI P/N	A
1/4"	HANG**X**38-040	18 MAX
3/8"	HANG**X**38-060	18 MAX
1/2"	HANG**X**38-100	18 MAX
3/4"	HANG**X**38-150	18 MAX
1"	HANG**X**38-200	18 MAX
1 1/4"	HANG**X**38-250	18 MAX
1 1/2"	HANG**X**38-300	18 MAX
2"	HANG**X**38-400	18 MAX

*NOTES: For P/N replace **X** for **CS** for A-36 Steel, **A** for 6061 Aluminum, **SS** for Stainless Steel.*

1/4" and 3/8" NPS Hangers have 1/8" liners; all other sizes have 1/4" liners.

SUNFLEX
METALLOY PVT. LTD.
AN ISO 9001:2015 CERTIFIED CO.

BACKING (CHILL) RING

Specifcation: MIL-STD-22D
FIGURE 63

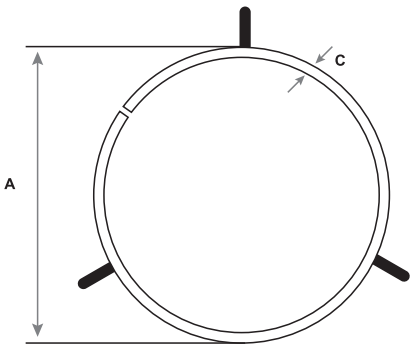

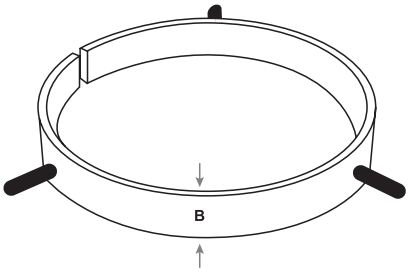



NOMINAL PIPE SIZE	SMI P/N	A	B	C
1/4"	CH**XY**-040	0.205	3/4" (+/- 1/32")	1/8" (+/-1/32")
3/8"	CH**XY**-060	0.330	3/4" (+/- 1/32")	1/8" (+/-1/32")
1/2"	CH**XY**-100	0.455	3/4" (+/- 1/32")	1/8" (+/-1/32")
3/4"	CH**XY**-150	0.705	3/4" (+/- 1/32")	1/8" (+/-1/32")
1"	CH**XY**-200	0.955	3/4" (+/- 1/32")	1/8" (+/-1/32")
1 1/4"	CH**XY**-250	1.205	3/4" (+/- 1/32")	1/8" (+/-1/32")
1 1/2"	CH**XY**-300	1.455	3/4" (+/- 1/32")	1/8" (+/-1/32")
2"	CH**XY**-400	1.955	3/4" (+/- 1/32")	1/8" (+/-1/32")
2 1/2"	CH**XY**-450	2.435	1" (+/- 1/32")	3/16" MAX
3"	CH**XY**-500	2.935	1" (+/- 1/32")	3/16" MAX
3 1/2"	CH**XY**-550	3.435	1" (+/- 1/32")	3/16" MAX
4"	CH**XY**-600	3.935	1" (+/- 1/32")	3/16" MAX
5"	CH**XY**-700	4.935	1" (+/- 1/32")	3/16" MAX
6"	CH**XY**-800	5.935	1" (+/- 1/32")	3/16" MAX
8"	CH**XY**-900	7.935	1" (+/- 1/32")	3/16" MAX
10"	CH**XY**-1000	9.935	1" (+/- 1/32")	3/16" MAX
12"	CH**XY**-1100	11.935	1" (+/- 1/32")	3/16" MAX

AVAILABLE ALLOYS:
(FERROUS) CARBON STEEL (A105) &
STAINLESS STEEL (GRADES 304 / 316 / 321 / 347)

(NON-FERROUS)
CUNI (90/10 & 70/30), NICU (MONEL), ALUMINUM

NOTES: For P/N's:
*Replace **X** with the following codes for Material:*

*Stainless Steel 304 - **304***
*Stainless Steel 316 - **316***
*Stainless Steel 321 - **321***
*Stainless Steel 347 - **347***
*Carbon Steel - **CS***
*Nicu (Monel) - **M***
*Aluminum - **A***
*Cuni 70/30 - **7***
*Cuni 90/10 - **9***

*Replace **Y** with the following codes for Pressure:*

*Class 200 - **200***
*Class 700 - **700***
*Schedule 40 - **40***
*Schedule 80 - **80***
*Schedule 160 - **160***

Backing Rings are designed for quick, easy alignment of pipe, tube, fttings, valves and assure precise, close tolerance ft-up. They allow complete penetration and fusion of the weld and radiograph perfect certifed welds. The 3/4" long spacer nubs automatically set the weld gap for the root-pass. The internal bevel and fat inner lands assure non-restricted fuid fow. Backing Rings are manufactured with the 3/32" ring gap on sizes 4" and smaller and 1/8" on sizes 5" and larger.

SUNFLEX
METALLOY PVT. LTD.
AN ISO 9001:2015 CERTIFIED CO.

BULKHEAD / DECK PENETRATION SLEEVE

CARBON STEEL

Specifcation: DWG 810-1385866

Intended for use with Class 200 or 700 Copper Nickel Tube IAW MIL-T-16420





NOMINAL PIPE SIZE	SMI P/N	A	B MIN	C (+0.004/-0.00)
1/4"	BULK866-040	3 1/4	0.80	0.542
3/8"	BULK866-060	3 1/4	0.95	0.677
1/2"	BULK866-100	3 1/4	1.10	0.842
3/4"	BULK866-150	3 1/4	1.35	1.052
1"	BULK866-200	3 1/4	1.60	1.317
1 1/4"	BULK866-250	3 1/4	2.00	1.663
1 1/2"	BULK866-300	3 1/4	2.25	1.903
2"	BULK866-400	3 1/4	2.75	2.378
2 1/2"	BULK866-450	3 1/4	3.25	2.878
3"	BULK866-500	3 1/4	3.88	3.503
3 1/2"	BULK866-550	3 1/4	4.38	4.003
4"	BULK866-600	3 1/4	4.88	4.503
5"	BULK866-700	3 1/4	6.00	5.567
6"	BULK866-800	3 1/4	7.13	6.629
8"	BULK866-900	3 1/4	9.13	8.629

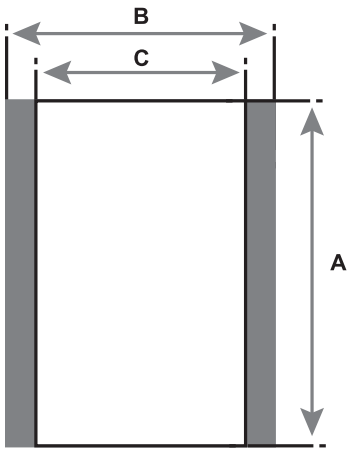

NOTES:

Where a piping line pierces a Bulkhead or Deck on a skew or angle, the length (DIM A) may be increased.

Sleeves may be furnished with or without grooves for rings of silver base brazing alloy upon request.

Sleeves may be furnished with or without a 3/16" vent hole upon request.

SUNFLEX
METALLOY PVT. LTD.
AN ISO 9001:2015 CERTIFIED CO.

SUNFLEX
METALLOY PVT. LTD.
AN ISO 9001:2015 CERTIFIED CO.

INSULATED BULKHEAD / DECK PENETRATION SLEEVE

CARBON STEEL

Specifcation: DWG 502-4886321

Intended for use with Class 200 or 700 Copper Nickel Tube IAW MIL-T-16420
For chilled water systems





NOMINAL PIPE SIZE	SMI P/N	A	B	C	D	E
1/2"	BULK321-100	1.345	0.842	1.660	4 1/2	5
3/4"	BULK321-150	1.574	1.052	1.900	4 1/2	5
1"	BULK321-200	1.885	1.317	2.375	4 1/2	5
1 1/4"	BULK321-250	2.253	1.663	2.875	4 1/2	5
2 1/2"	BULK321-450	3.285	2.878	4.000	6	6 1/2
3 1/2"	BULK321-550	4.983	4.018	5.563	7 1/2	8
5"	BULK321-700	5.995	5.688	6.625	10	10 1/2
6"	BULK321-800	7.500	6.750	8.625	11 1/2	12
8"	BULK321-900	9.414	8.750	10.750	11 1/2	12

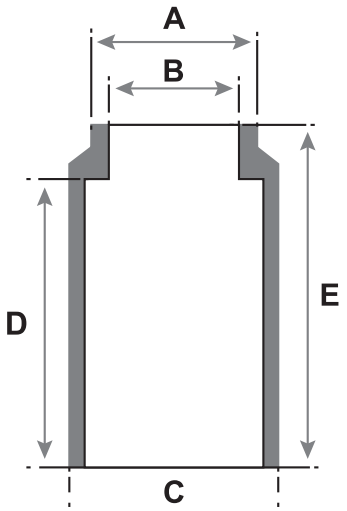

SUNFLEX
METALLOY PVT. LTD.
AN ISO 9001:2015 CERTIFIED CO.

SUNFLEX
METALLOY PVT. LTD.
AN ISO 9001:2015 CERTIFIED CO.

NON PILOTED BOSS

Specifcation: Various

Pressure Rating: 3000 PSI

Intended for use with Class 200 or 700 Copper Nickel Tube IAW MIL-T-16420

AVAILABLE ALLOYS:
(FERROUS) CARBON STEEL (A105) & STAINLESS STEEL (GRADES 304 / 316 / 321 / 347)

(NON-FERROUS) CUNI (90/10 & 70/30), NICU (MONEL), ALUMINUM AND BRONZE

SERVICE RATING TABLE				
Nominal Pipe Size (INCHES)	Maximum Working Pressure (LB/IN²)	Maximum Temperature (°F)	Maximum Working Pressure (LB/IN²)	Maximum Temperature (°F)
1/4 through 6 Above 6	200 150	425 425	400 250	150 150

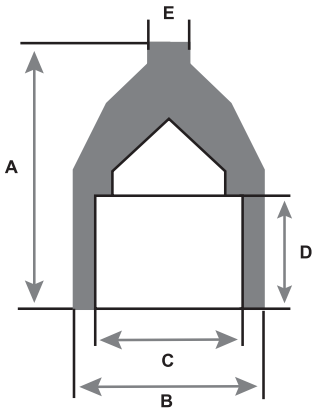





NOMINAL PIPE SIZE	1/4	3/8	1/2	3/4	1	1 1/4	1 1/2	2
SMI P/N	NPBOSS**X**-040	NPBOSS**X**-060	NPBOSS**X**-100	NPBOSS**X**-150	NPBOSS**X**-200	NPBOSS**X**-250	NPBOSS**X**-300	NPBOSS**X**-400
A	1.625	1.625	1.625	1.875	1.938	2.125	2.125	2.500
B	1.000	1.125	1.250	1.500	1.875	2.250	2.500	3.000
C	0.555	0.690	0.855	1.065	1.330	1.675	1.915	2.406
D	0.375 (MIN.)	0.375 (MIN.)	0.375 (MIN.)	0.5 (MIN.)	0.5 (MIN.)	0.5 (MIN.)	0.5 (MIN.)	0.625 (MIN.)
E	0.188	0.313	0.313	0.313	0.313	0.313	0.313	0.313

*NOTES: For P/N's replace **X** with the following codes:*

*Stainless Steel 304 - **304***
*Stainless Steel 316 - **316***
*Stainless Steel 321 - **321***
*Stainless Steel 347 - **347***

*Carbon Steel - **CS***
*Cuni 90/10 - **9***
*Cuni 70/30 - **7***

*Bronze - **B***
*Nicu (Monel) - **M***
*Aluminum - **A***

**Bosses in accordance with various drawings are available upon request.*

SUNFLEX
METALLOY PVT. LTD.
AN ISO 9001:2015 CERTIFIED CO.

SUNFLEX
METALLOY PVT. LTD.
AN ISO 9001:2015 CERTIFIED CO.

PILOTED BOSS

Specifcation: Various

Pressure Rating: 3000 PSI

Intended for use with Class 200 or 700 Copper Nickel Tube IAW MIL-T-16420

SERVICE RATING TABLE				
Nominal Pipe Size (INCHES)	Maximum Working Pressure (LB/IN²)	Maximum Temperature (°F)	Maximum Working Pressure (LB/IN²)	Maximum Temperature (°F)
1/4 through 6 Above 6	200 150	425 425	400 250	150 150

AVAILABLE ALLOYS:
(FERROUS) CARBON STEEL (A105) &
STAINLESS STEEL (GRADES 304 / 316 / 321 / 347)

(NON-FERROUS) CUNI (90/10 & 70/30),
NICU (MONEL), ALUMINUM AND BRONZE

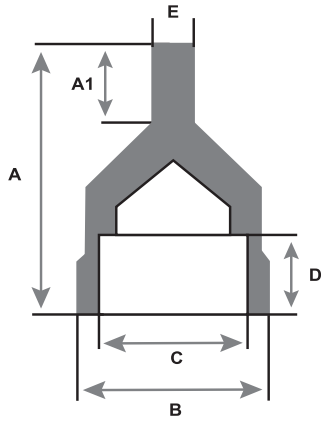



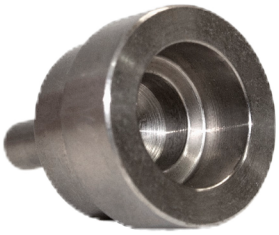

NOMINAL PIPE SIZE	1/4	3/8	1/2	3/4	1	1 1/4	1 1/2	2
SMI P/N	PBOSS**X**-040	PBOSS**X**-060	PBOSS**X**-100	PBOSS**X**-150	PBOSS**X**-200	PBOSS**X**-250	PBOSS**X**-300	PBOSS**X**-400
A	1.625	1.625	1.625	1.875	1.938	2.125	2.125	2.500
A1	0.375	0.375	0.375	0.375	0.375	0.375	0.375	0.375
B	1.000	1.125	1.250	1.500	1.875	2.250	2.500	3.000
C	0.555	0.690	0.855	1.065	1.330	1.675	1.915	2.406
D	0.375 (MIN.)	0.375 (MIN.)	0.375 (MIN.)	0.5 (MIN.)	0.5 (MIN.)	0.5 (MIN.)	0.5 (MIN.)	0.625 (MIN.)
E	0.188	0.313	0.313	0.313	0.313	0.313	0.313	0.313

*NOTES: For P/N's replace **X** with the following codes:*

*Stainless Steel 304 - **304***
*Stainless Steel 316 - **316***
*Stainless Steel 321 - **321***
*Stainless Steel 347 - **347***

*Carbon Steel - **CS***
*Cuni 90/10 - **9***
*Cuni 70/30 - **7***

*Bronze - **B***
*Nicu (Monel) - **M***
*Aluminum - **A***

**Bosses in accordance with various drawings are available upon request.*

SUNFLEX
METALLOY PVT. LTD.
AN ISO 9001:2015 CERTIFIED CO.

SUNFLEX
METALLOY PVT. LTD.
AN ISO 9001:2015 CERTIFIED CO.

PIPE NIPPLES

Specifcation: ASTM A733 / ASME B1.20.1 (NPT)

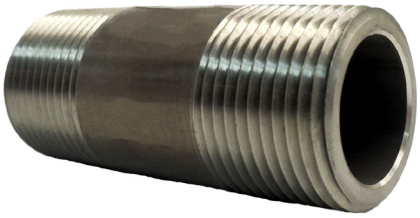

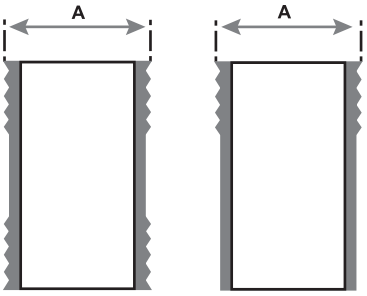





NOMINAL PIPE SIZE	SMI P/N	THREAD/ INCH	A
1/8"	NIP**XY**-020	27	0.405
1/4"	NIP**XY**-040	18	0.540
3/8"	NIP**XY**-060	18	0.675
1/2"	NIP**XY**-100	14	0.840
3/4"	NIP**XY**-150	14	1.050
1"	NIP**XY**-200	11.5	1.315
1 1/4"	NIP**XY**-250	11.5	1.660
1 1/2"	NIP**XY**-300	11.5	1.900
2"	NIP**XY**-400	11.5	2.375
2 1/2"	NIP**XY**-450	8	2.875
3"	NIP**XY**-500	8	3.500
3 1/2"	NIP**XY**-550	8	4.000
4"	NIP**XY**-600	8	4.500

AVAILABLE ALLOYS:
(FERROUS) CARBON STEEL (A105) & STAINLESS STEEL (GRADES 304 / 316 / 321 / 347)
(NON-FERROUS) CUNI (90/10 & 70/30), NICU (MONEL), ALUMINUM AND BRONZE

NOTES: For P/N's:
*Replace **X** with the following codes for Material:*

*Stainless Steel 304 - **304***
*Stainless Steel 316 - **316***
*Stainless Steel 321 - **321***
*Stainless Steel 347 - **347***
*Carbon Steel - **CS***
*Nicu (Monel) - **M***
*Aluminum - **A***
*Cuni 70/30 - **7***
*Cuni 90/10 - **9***
*Bronze - **B***

*Replace **Y** with the following codes for Style:*

*Threaded One End - **TOE***
*Threaded Both Ends - **TBE***

** Length of nipple must be specifed at time of order.*

SUNFLEX
METALLOY PVT. LTD.
AN ISO 9001:2015 CERTIFIED CO.

SUNFLEX
METALLOY PVT. LTD.
AN ISO 9001:2015 CERTIFIED CO.

OUTLET SOCKET WELD

Specifcation: MSS-SP-97

Pressure Rating: 3000 PSI

AVAILABLE ALLOYS:
(FERROUS) CARBON STEEL (A105) &
STAINLESS STEEL (GRADES 304 / 316 / 321 / 347)

(NON-FERROUS) CUNI (90/10 & 70/30),
NICU (MONEL), ALUMINUM AND BRONZE

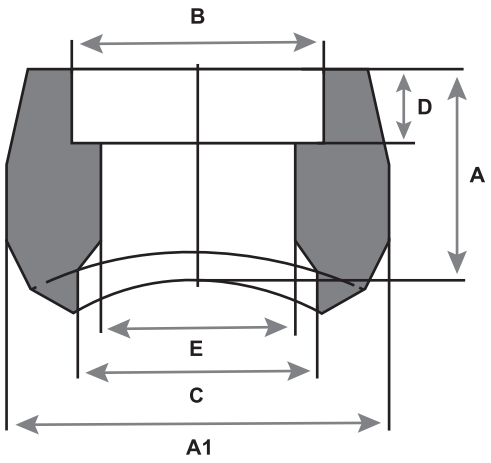





CLASS 3000											
OUTLET SIZE	**1/4**	**3/8**	**1/2**	**3/4**	**1**	**1 1/4**	**1 1/2**	**2**	**2 1/2**	**3**	**4**
SMI P/N	SOLET**X**-040	SOLET**X**-060	SOLET**X**-100	SOLET**X**-150	SOLET**X**-200	SOLET**X**-250	SOLET**X**-300	SOLET**X**-400	SOLET**X**-450	SOLET**X**-500	SOLET**X**-600
A	0.750	0.813	1.000	1.063	1.313	1.313	1.375	1.500	1.813	2.000	2.250
A1	1.000	1.250	1.375	1.750	2.125	2.563	2.875	3.500	4.063	4.813	6.000
B	0.540 MIN - 0.543 MAX	0.675 MIN - 0.678 MAX	0.840 MIN - 0.843 MAX	1.050 MIN - 1.053 MAX	1.315 MIN - 1.318 MAX	1.660 MIN - 1.663 MAX	1.900 MIN - 1.905 MAX	2.375 MIN - 2.380 MAX	2.875 MIN - 2.882 MAX	3.500 MIN - 3.507 MAX	4.500 MIN - 4.507 MAX
C	0.625	0.750	0.938	1.188	1.438	1.750	2.000	2.563	3.000	3.688	4.750
D	0.375 (MIN.)	0.375 (MIN.)	0.375 (MIN.)	0.500 (MIN.)	0.500 (MIN.)	0.500 (MIN.)	0.500 (MIN.)	0.625 (MIN.)	0.625 (MIN.)	0.625 (MIN.)	0.75 (MIN.)
E	0.379 MIN - 0.410 MAX	0.514 MIN - 0.545 MAX	0.679 MIN - 0.710 MAX	0.889 MIN - 0.920 MAX	1.154 MIN - 1.185 MAX	1.485 MIN - 1.516 MAX	1.725 MIN - 1.756 MAX	2.178 MIN - 2.209 MAX	2.678 MIN - 2.709 MAX	3.279 MIN - 3.310 MAX	4.251 MIN - 4.282 MAX

*NOTES: For P/N's replace **X** with the following codes:*

*Stainless Steel 304 - **304***
*Stainless Steel 316 - **316***
*Stainless Steel 321 - **321***
*Stainless Steel 347 - **347***

*Carbon Steel - **CS***
*Cuni 90/10 - **9***
*Cuni 70/30 - **7***

*Bronze - **B***
*Nicu (Monel) - **M***
*Aluminum - **A***

SUNFLEX
METALLOY PVT. LTD.
AN ISO 9001:2015 CERTIFIED CO.

SUNFLEX
METALLOY PVT. LTD.
AN ISO 9001:2015 CERTIFIED CO.

THERMOWELL

Specifcation: MIL-T-24270

THERMOWELL SENSOR		
SENSOR TYPE	**SYMBOL**	**SPECIFICATION**
Mechanical	M	MIL-I-17244 or MIL-T-19646
Electrical	E	MIL-T-24388

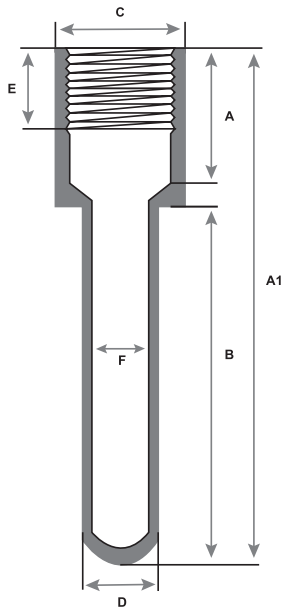



AVAILABLE ALLOYS: (FERROUS) CARBON STEEL (A105) & STAINLESS STEEL (GRADES 304 / 316 / 321 / 347)
(NON-FERROUS) CUNI (90/10 & 70/30), NICU (MONEL), AND BRONZE

INSERTION LENGTH	SMI P/N	A	A1	B	C	D	E	F	THREADS
2"	THERMOX-2	1.063	3.313	2	1.047 MIN - 1.049 MAX	0.625 +/- 0.005	0.438	0.379 (-0.0/+0.008)	.750-28UNS-2B
4"	THERMOX-4	1.063	5.313	4	1.047 MIN - 1.049 MAX	0.625 +/- 0.005	0.438	0.379 (-0.0/+0.008)	.750-28UNS-2B

NOTES: For P/N's replace X with the following codes:

*Stainless Steel 304 - **304***
*Stainless Steel 316 - **316***
*Stainless Steel 321 - **321***
*Stainless Steel 347 - **347***
*Carbon Steel - **CS***
*Bronze - **B***
*Cuni 90/10 - **9***
*Cuni 70/30 - **7***
*Nicu (Monel) - **M***

Additional sizes and types available upon request.
Thermowells are designed to receive sensors of mechanical thermometers or electrical temperature sensors.

SUNFLEX
METALLOY PVT. LTD.
AN ISO 9001:2015 CERTIFIED CO.

OUTLET THREADED

Specifcation: MSS-SP-97

Pressure Rating: 3000

AVAILABLE ALLOYS:
(FERROUS) CARBON STEEL (A105) &
STAINLESS STEEL (GRADES 304 / 316 / 321 / 347)

(NON-FERROUS) CUNI (90/10 & 70/30),
NICU (MONEL), ALUMINUM AND BRONZE

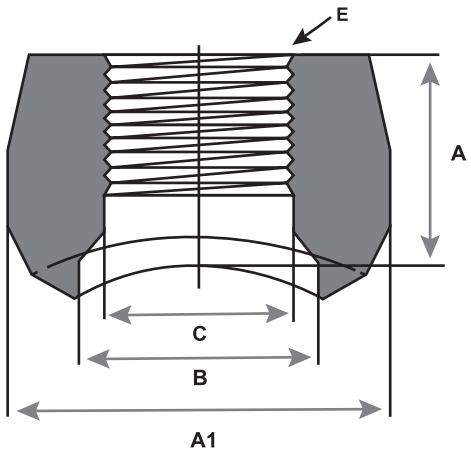

CLASS 3000											
OUTLET SIZE	**1/4**	**3/8**	**1/2**	**3/4**	**1**	**1 1/4**	**1 1/2**	**2**	**2 1/2**	**3**	**4**
SMI P/N	TOLET**X**-040	TOLET**X**-060	TOLET**X**-100	TOLET**X**-150	TOLET**X**-200	TOLET**X**-250	TOLET**X**-300	TOLET**X**-400	TOLET**X**-450	TOLET**X**-500	TOLET**X**-600
A	0.750	0.813	1.000	1.063	1.313	1.313	1.375	1.500	1.813	2.000	2.250
A1	1.000	1.250	1.375	1.750	2.125	2.563	2.875	3.500	4.063	4.813	6.000
B	0.625	0.750	0.938	1.188	1.438	1.750	2.000	2.563	3.000	3.688	4.750
C	0.379 MIN - 0.410 MAX	0.514 MIN - 0.545 MAX	0.679 MIN - 0.710 MAX	0.889 MIN - 0.920 MAX	1.154 MIN - 1.185 MAX	1.485 MIN - 1.516 MAX	1.725 MIN - 1.756 MAX	2.178 MIN - 2.209 MAX	2.678 MIN - 2.709 MAX	3.279 MIN - 3.310 MAX	4.251 MIN - 4.282 MAX
E	1/4 X 18	3/8 X 18	1/2 X 14	3/4 X 14	1 X 11.5	1 1/4 X 11.5	1 1/2 X 11.5	2 X 11.5	2 1/2 X 8	3 X 8	4 X 8

*NOTES: For P/N's replace **X** with the following codes:*

*Stainless Steel 304 - **304***
*Stainless Steel 316 - **316***
*Stainless Steel 321 - **321***
*Stainless Steel 347 - **347***

*Carbon Steel - **CS***
*Cuni 90/10 - **9***
*Cuni 70/30 - **7***

*Bronze - **B***
*Nicu (Monel) - **M***
*Aluminum - **A***

SUNFLEX
METALLOY PVT. LTD.
AN ISO 9001:2015 CERTIFIED CO.